FRIB

International Accelerator School (IAS)

Jul 10 – 20, 2023

Large Scale Cryogenics for Accelerators

Dr. Nusair M. Hasan

MICHIGAN STATE UNIVERSITY

U.S. DEPARTMENT OF ENERGY | Office of Science

This material is based upon work supported by the U.S. Department of Energy, Office of Science, Office of Nuclear Physics and used resources of the Facility for Rare Isotope Beams (FRIB), which is a DOE Office of Science User Facility under Award Number DE-SC0000661.

Cryogenic Engineering

- Cryogenic Engineering

  - What is it?
    - » It is…the *research of the governing physics and the design of thermal process equipment and systems that operate at cryogenic temperature*
      - i.e., at or below the temperature necessary to liquefy natural gas (NBP -260 F, or 112 Kelvin)

  - What is unique about it?
    - » Very energy intensive processes; ~1 kilo-Watt of input power for every one Watt of cooling at 2 Kelvin
      - 2 Kelvin corresponds to saturated Helium at 30 milli-bar (3/100 of an atm)
    - » Requires an understanding and proper application of non-constant and non-ideal fluid and material properties
    - » Superconductivity and superfluidity (helium cryogenics) – both researched (fundamentally) and exploited for applications

Cryogenic Refrigeration / Liquefaction [1]

- Cryogenic loads:
  - Isothermal (constant temperature) refrigeration;
    - » *heat into a saturated liquid bath, maintained at constant pressure*
    - » *Involves phase change (at constant pressure) of refrigerant fluid*
  - Liquefaction; liquid supplied and withdrawn from a saturated liquid bath, maintained at a constant pressure
  - Non-isothermal refrigeration; e.g., fluid sensibly heated

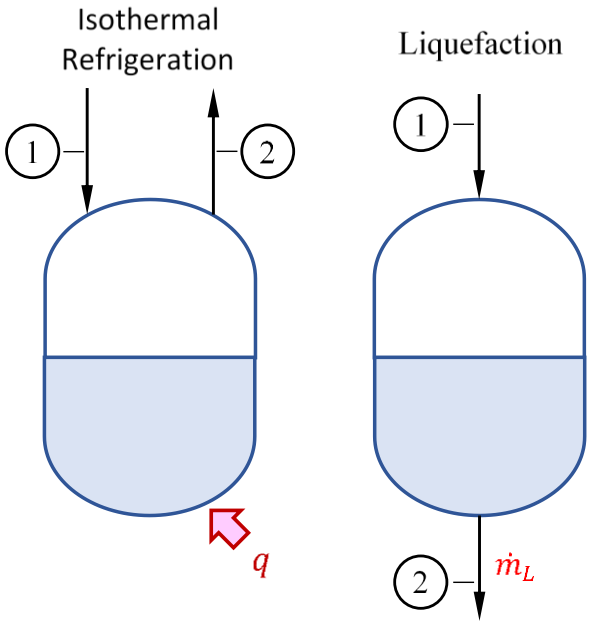

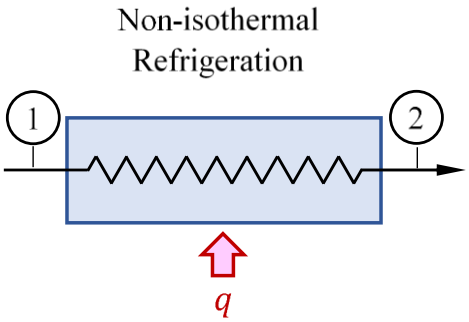

Cryogenic Refrigeration / Liquefaction [2]

- Generally, the overall capacity rate in a cycle for an isothermal refrigeration load is "balanced" (in the heat exchanger sense)
  - Although, with the actual process cycle, this may not be 'locally' true

- Generally, the overall capacity rate in a cycle for a liquefaction load is *not* "balanced" (in the heat exchanger sense)
  - This may be true over the entire temperature range (saturated fluid to ambient), or only for a portion of the temperature range

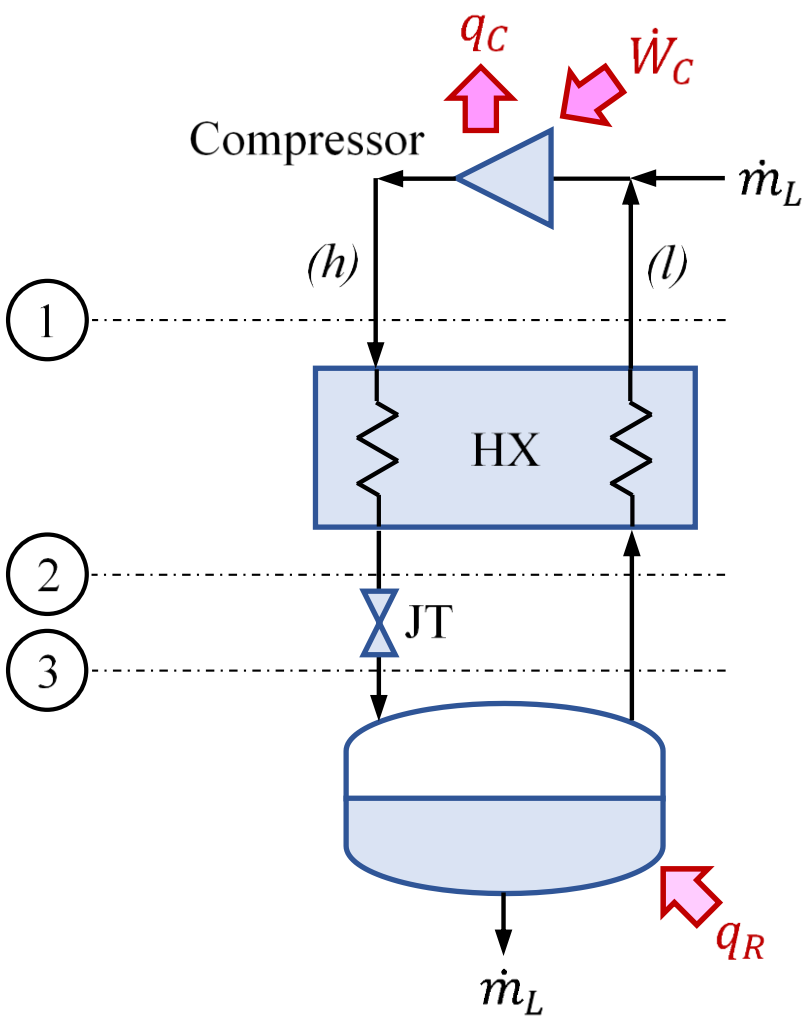

Cryogenic Refrigeration / Liquefaction [3]

- Sometimes the wording used for an actual refrigeration cycle is ambiguous…
- A “refrigeration system”, “refrigerator”, and “liquefier” can have all of these loads.
  - However, usually a “refrigerator” refers to a system dominated by a refrigeration load
  - And, a “liquefier” refers to a system dominated by a liquefaction load
- Note: for refrigeration systems that have isothermal refrigeration and a liquefaction load, it does not take much of liquefaction load for the overall capacity rate to be non-balanced

Thermodynamic Basis
The Traditional Carnot Cycle [1]

- Carnot cycle can be a heat engine, *transferring* heat from a high temperature reservoir to a lower temperature reservoir with a net work output
  - It can also be a refrigerator, operating in reverse and requiring a net work input
  - Carnot cycle does *not convert* heat energy!
- Carnot cycle demonstrates a result of the 2nd Law
  - » "It is impossible to construct an engine which will work in a complete cycle, and produce no effect except the raising of a weight and the cooling of a heat reservoir" (Max Planck, Treatise on Thermodynamics, 1897)
  - There must be heat rejection to the environment!

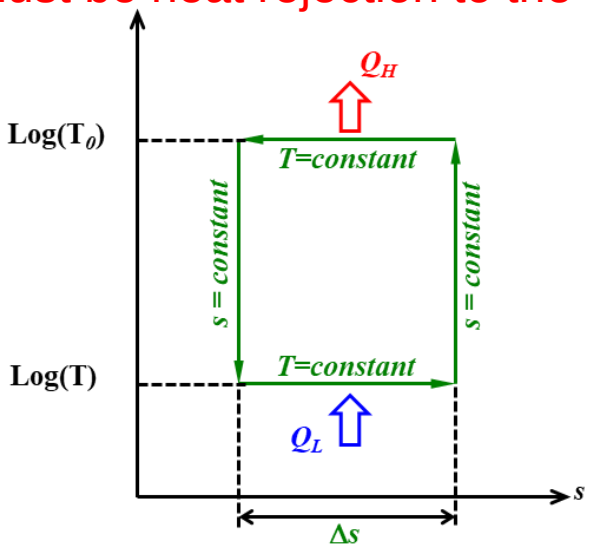

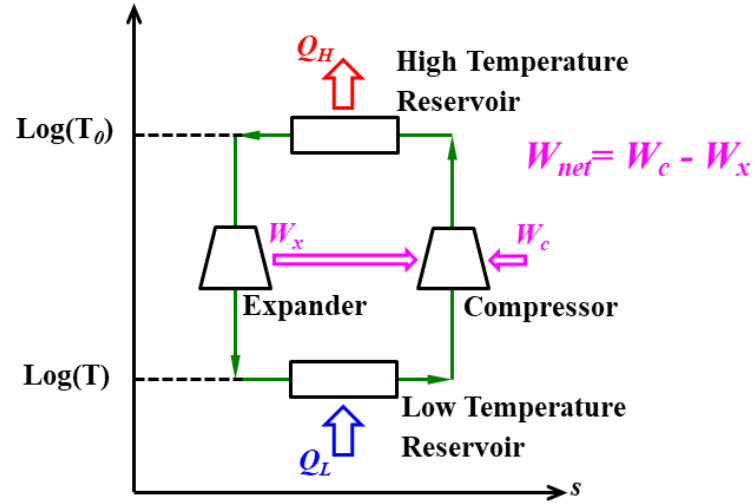

Thermodynamic Basis
The Traditional Carnot Cycle [2]

- 2nd law tells us that for reversible heat transfer from a constant temperature (thermal) reservoir for this Carnot cycle,

$$\Delta S = Q_H/T_0 = Q_L/T$$

- And, from the 1st Law, since we start and end at the same state point for a cycle,

$$\Delta E = 0 = \oint \delta W + \oint \delta Q = W_{net,rev} - Q_H + Q_L$$

  - Where, $W_{net,rev}$ is the net work input; i.e., total input work (W_c) minus total output work (W_x)

$$W_{net,rev} = W_c - W_x = \Delta S(T_0 - T)$$

- For an (isothermal) refrigerator, the coefficient of performance is defined as,

$$\beta \equiv \frac{Q_L}{W_{net,rev}} = \left(\frac{T_0}{T} - 1\right)^{-1}$$

Thermodynamic Basis
The Traditional Carnot Cycle [3]

- More commonly in cryogenics, we refer to the inverse of the coefficient of performance, as it is more representative of the energy intensiveness of such processes; i.e., ratio of net input power to cooling provided to the load

$$\beta_i = COP_{inv} = \frac{T_0}{T} - 1$$

- Note that to arrive at this result, we did not have to assume anything about the process between the reversible isothermal heat transfer steps, except that the entropy difference was constant at a given temperature

Thermodynamic Basis
The Traditional Carnot Cycle [4]

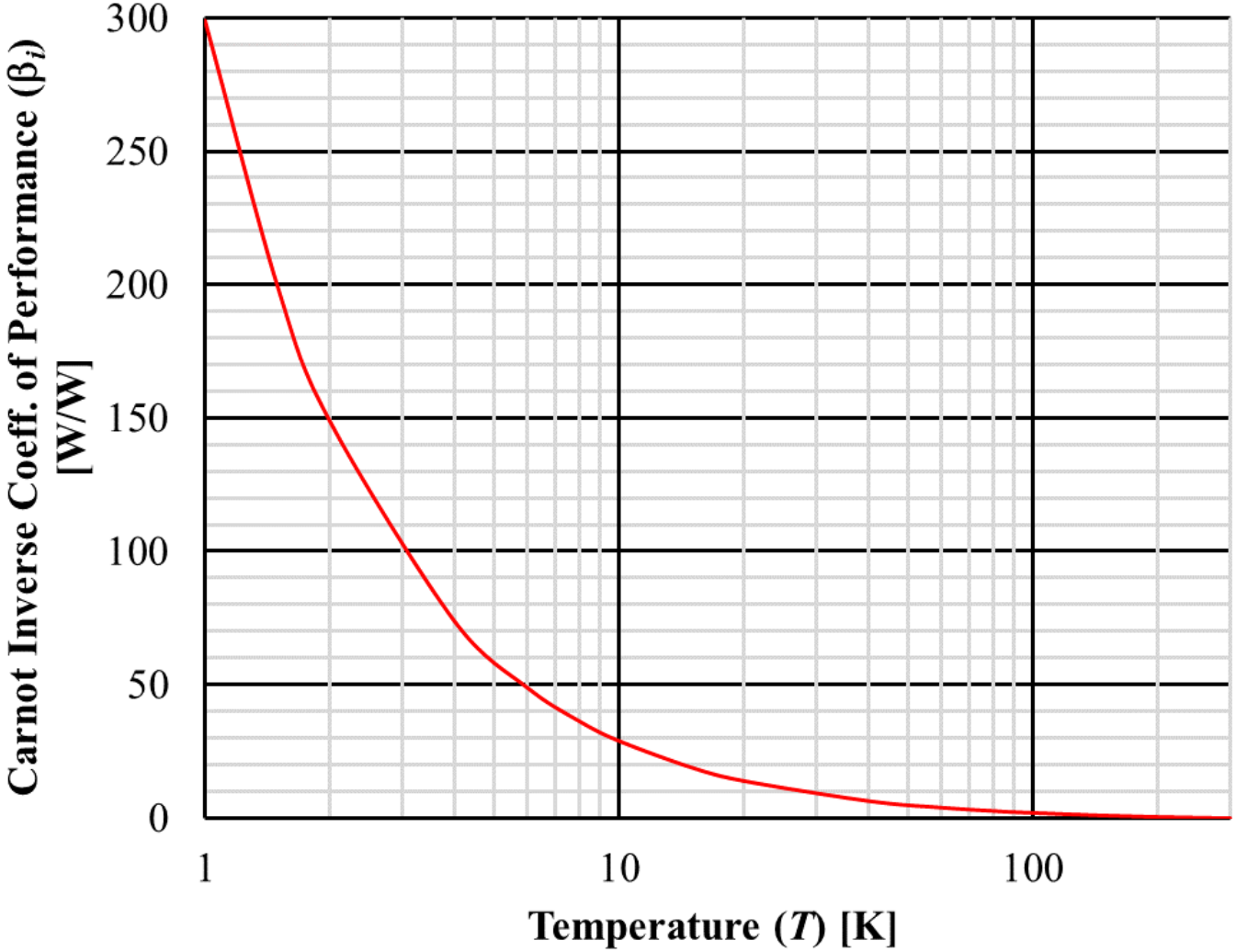

Thermodynamic Basis
The Traditional Carnot Cycle [4]

- Below are some results for a number of refrigerants:

Name	Symbol	R #	MW [g/mol]	T_{sat} at p_0 [K]	λ [J/g]	σ [J/g-K]	w_{rev} [J/g]	β_i [W/W]
Refrigerant-11	CCl_3F	R-11	137.4	296.8	181.3	0.611	2.0	0.01
Refrigerant-134A	$C_2H_2F_4$	R-134a	102.0	246.9	217.0	0.879	46.7	0.22
Refrigerant-12	CCl_2F_2	R-124	120.9	243.4	166.0	0.682	38.6	0.23
Ammonia	NH_3	R-717	66.05	239.8	1369	5.708	343.5	0.25
Refrigerant-22	$CHClF_2$	R-22	86.48	234.3	230.4	0.992	67.1	0.29
Xenon	Xe		131.3	165.0	96.4	0.584	78.8	0.82
Krypton	Kr	R-784	83.80	119.8	107.9	0.901	162.4	1.50
Methane	CH_4	R-50	16.04	111.7	510.3	4.571	860.8	1.69
Oxygen	O_2	R-732	32.00	90.19	213.1	2.362	495.7	2.33
Argon	Ar	R-740	39.95	87.28	161.3	1.848	393.0	2.44
Nitrogen	N_2	R-728	28.01	77.31	198.9	2.571	572.4	2.88
Neon	Ne	R-720	20.18	27.09	85.7	3.164	863.4	10.1
Deuterium	D		4.028	23.66	320.9	13.77	3810	11.9
Para Hydrogen	$p\text{-}H_2$		2.016	20.28	445.4	21.97	6145	13.8
Helium-4	He	R-704	4.003	4.22	20.7	4.898	1449	69.9

- Note that we reference to 1.0 atm for the saturated condition, and λ is the latent heat at 1.0 atm. $\sigma = \Delta s$

- w_{rev} is the reversible (specific) input work required for isothermal refrigeration at T_{sat}

Exergy / Availability

Concept of Exergy (Availability) [1]

- Not all forms of energy (electric, chemical or thermal) are created equal.

- Quality of energy varies depending on form of energy, mode of storage, environment. Quality of a given form of energy depends on modes of storage (ordered or disordered).

- The quality (capacity to cause change) of disordered energy forms, characterized by entropy, is variable and depends both on the form of energy (chemical, thermal, etc) and on the parameters of the energy carrier and of the environment.

Concept of Exergy (Availability) [2]

- Ordered forms of energy, which are not characterized by entropy, have invariant quality and are fully convertible, through work interaction, to other forms of energy.

- A universal standard of quality is needed.

- *The most natural and convenient standard is the maximum work which can be obtained from a given form of energy using the environmental parameters as the reference state.*

- This standard of energy quality is called *exergy*.

Applications of Exergy / Availability

Liquefaction to Refrigeration Equivalence [1]

- Equivalence is established based on equal 'Carnot Work', *i.e.* reversible input work (exergy or availability)

  - If a Carnot Liquefier is able to produce 1 [g/s] of liquefaction at the expense of x [kW] of reversible input work, then how much isothermal heat load will a Carnot Refrigerator support using the same amount of reversible input work.

Liquefaction to Refrigeration Equivalence [2]

- Consider a general steady process; the First Law is,

$$\dot{Q} + \dot{W} + \sum_{in} \dot{m}_i h_i - \sum_{out} \dot{m}_e h_e = 0$$

- If the heat transfer is reversible, then it occurs at dT (higher or lower) than the environment temperature, T_0

$$\dot{Q} = \dot{Q}_{rev} = T_0(S_e - S_i) = T_0 \sum_{out} \dot{m}_e s_e - T_0 \sum_{in} \dot{m}_i s_i$$

- Further, if the input power is equal to the reversible input power then,

$$\dot{W} = \dot{W}_{rev}$$

- So, we have, for a steady reversible process,

$$\dot{W}_{rev} = \sum_{out} \dot{m}_e (h_e - T_0\, s_e) - \sum_{in} \dot{m}_i (h_i - T_0\, s_i)$$

Liquefaction to Refrigeration Equivalence [3]

$$\dot{W}_{rev} = \sum_{out} \dot{m}_e (h_e - T_0\, s_e) - \sum_{in} \dot{m}_i (h_i - T_0\, s_i)$$

- We define the quantity of 'physical exergy' as,

$$\varepsilon \equiv h - T_0\, s$$

  - Note that physical exergy has units of [J/kg]

- Reversible input power, $\dot{W}_{rev} = \dot{m}_e\, \varepsilon_e - \dot{m}_i\, \varepsilon_i$

Liquefaction to Refrigeration Equivalence [4]

- For a Carnot Helium Refrigerator:

Name	Symbol	R #	MW [g/mol]	T_{sat} at p_0 [K]	λ [J/g]	σ [J/g-K]	w_{rev} [J/g]	β_i [W/W]
Helium-4	He	R-704	4.003	4.22	20.7	4.898	1449	69.9

- Refrigeration specific load exergy (reversible input work)

$$\dot{w}_{rev,R} = \Delta\varepsilon_R$$

$$\dot{w}_{rev,R} = \varepsilon_1 - \varepsilon_2 = (\lambda - T_0\sigma)$$

$$\dot{w}_{rev,R} = 1449 \text{ J/g}$$

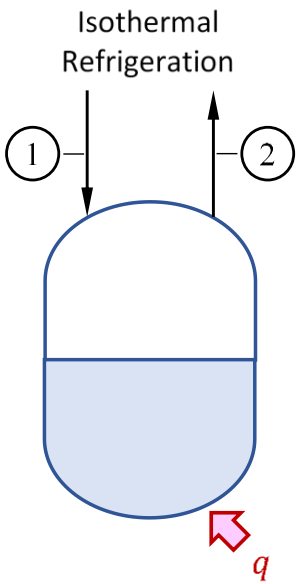

- Latent heat (mass specific cooling provided)

$$\lambda = 20.7 \text{ J/g}$$

Liquefaction to Refrigeration Equivalence [5]

- For the Carnot Helium Liquefier:

Name	Symbol	R #	*MW* [g/mol]	T_{sat} at p_0 [K]	Δh [J/g]	Δs [J/g-K]	(T_0·Δs) [J/g]	w_{rev} [J/g]
Helium-4	He	R-704	4.003	4.22	1564	28.01	8403	6839

- Liquefaction specific load exergy

$$\dot{w}_{rev,L} = \Delta\varepsilon_L$$

$$\dot{w}_{rev,L} = \varepsilon_2 - \varepsilon_{m,i} = (\Delta h - T_0 \Delta s)$$

$$\dot{w}_{rev,L} = 6839 \frac{J}{g}$$

Here, state (m, i) *represents the ambient state from which the*

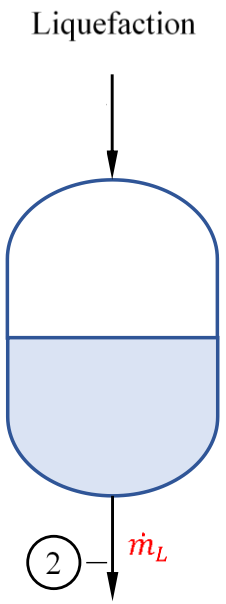

- Equivalence:

$$\lambda_{eq} = \frac{q_{R,eq}}{\dot{m}_{L,eq}} = \lambda \frac{\Delta\varepsilon_L}{\Delta\varepsilon_R} = 97.7 \text{ W/(g/s)}$$

Concept of Thermal (Radiation) Shield [1]

- Cryogenic equipment (heat exchangers, transfer lines, storage vessels) are often thermally shielded with insulation (MLI) and 'intercepted' using a lower than ambient temperature.
- In that case, part of the thermal radiation heat in-leak is 'intercepted' by the thermal shield (i.e. part of the thermal radiation heat in-leak is absorbed by the thermal shield maintained at a lower than environment temperature), and the rest of the heat in-leak is absorbed by the load maintained at load temperature (say, 4.5 K for a LHe cryostat).
- There exists an optimum thermal intercept temperature at which exergy (loss) associated with this heat in-leak is minimum.

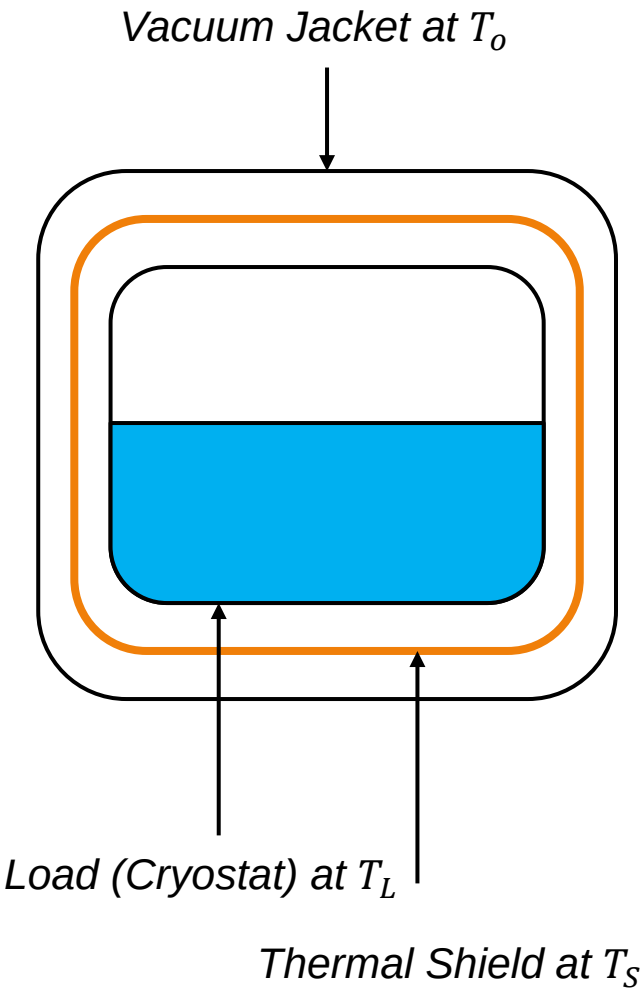

Concept of Thermal (Radiation) Shield [2]

- Heat in-leak from environment to thermal shield

$$q_s = \varepsilon A_s \sigma_b (T_o^4 - T_s^4)$$

- Reversible input work (exergy) associated with this heat transfer

$$E_s = \left({T_o - T_s}/{T_s} \right) q_s$$

- Heat in-leak from thermal shield to load

$$q_L = \varepsilon A_L \sigma_b (T_s^4 - T_L^4)$$

- Reversible input work (exergy) associated with this heat transfer

$$E_L = \left({T_s - T_L}/{T_L} \right) q_L$$

- Total exergy (loss) for heat in-leak due to radiation

$$E = E_s + E_L$$

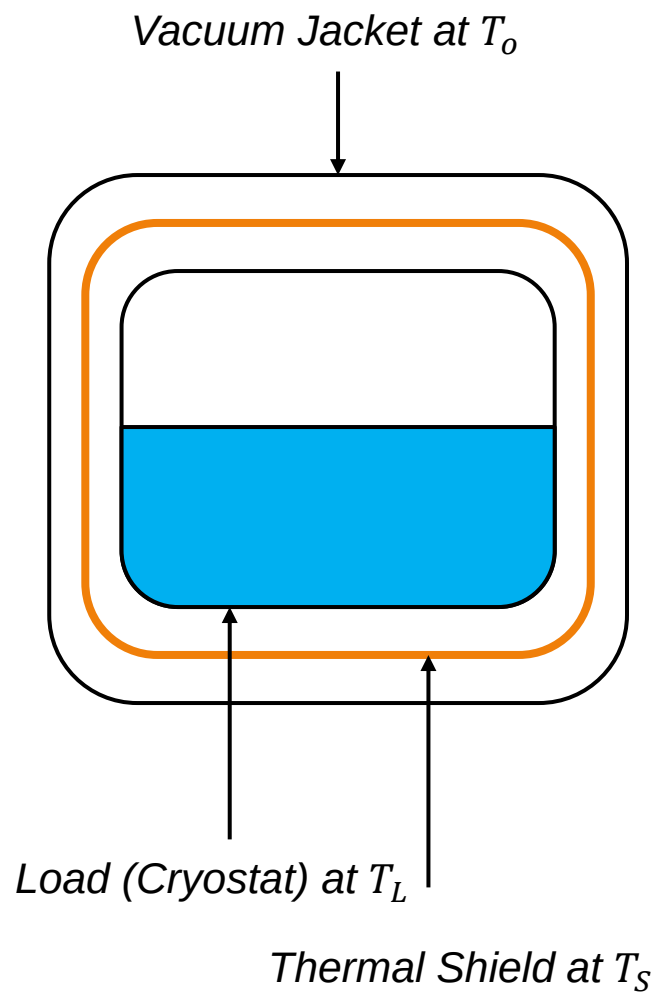

Concept of Thermal (Radiation) Shield [3]

- Considering a LHe cryostat (T_L = 4.5, A_s = 1.0 m^2, A_L = 1.0 m^2, ε = 0.1), the optimum temperature at which exergy (loss) due to radiation heat in-leak will be minimum is approx. 114.5 K.

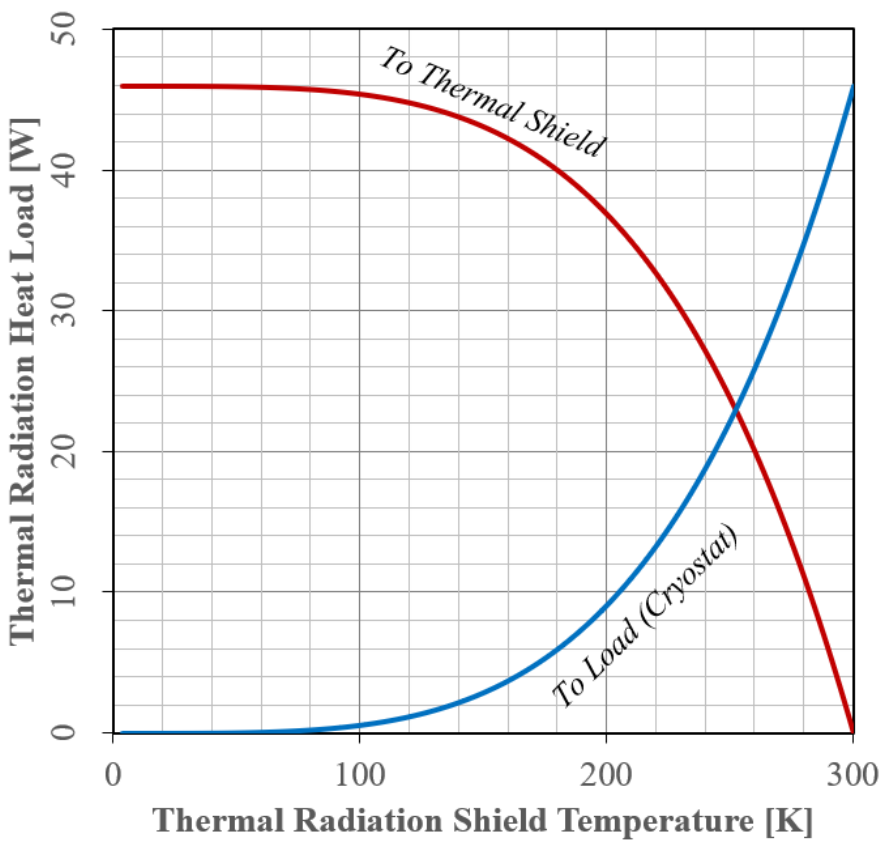

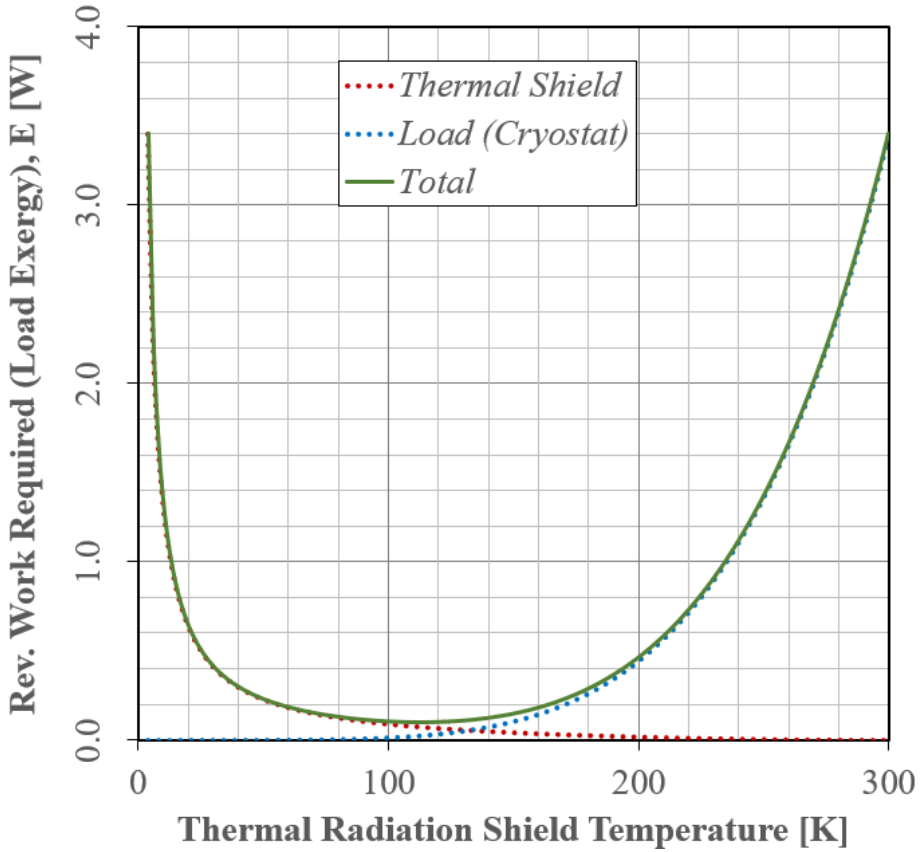

Practical Cryogenic Refrigeration / Liquefaction Cycles

Practical Cryogenic Cycles [1]

- There are many different types of refrigeration cycles, with many variants

- In addition, these may be distinguished as recuperative and regenerative – according to the heat exchanger type used
  - e.g., for above 2 K: Philips (Sterling), Vuilleumier, Solvay, Gifford-McMahon, pulse tube, etc.

- Regenerative refrigeration cycles involve cyclic process, where the flow through the heat exchanger is not continuous, but periodic, with alternating flow direction, storing and removing heat
  - Commonly used in '*Cryo-coolers*'

Practical Cryogenic Cycles [2]

- We will concern ourselves with ones involving recuperative heat exchange (those commonly used in large-scale cryogenic systems), and to the following:
  - Linde-Hampson or JT process
  - Modified Brayton process
  - Claude process
  - Collins (helium liquefaction) process

- Many of these basic types are ‘super-imposed’ or ‘cascaded’ in actual cryogenic systems

JT Process

- JT (Joule-Thompson) process
- Also called a Linde-Hampson process
- The is no work extraction, only *isenthalpic expansion* across the JT valve
- From the start-up (cool-down) phase, the refrigerant gas must produce cooling due to the isenthalpic expansion across the valve
- Can be a refrigerator or liquefier or both.

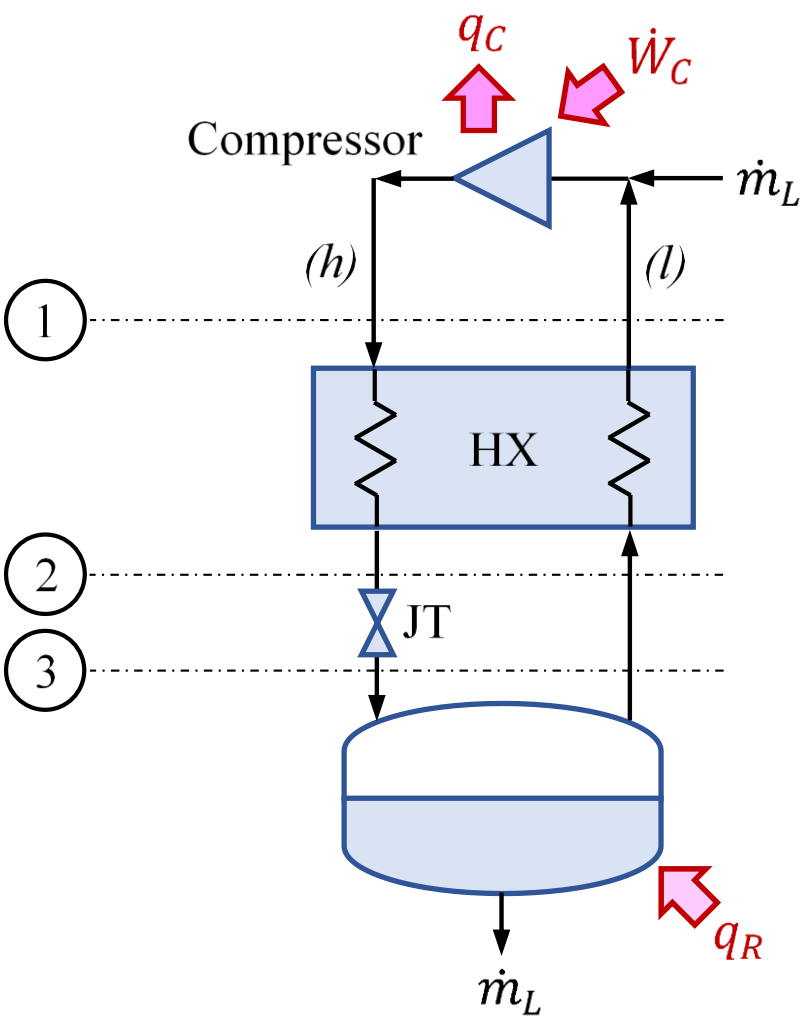

Joule Thompson (JT) Refrigerator [1]

- Low to high pressure is right to left (same as $T - s$ diagram)
- Increasing numbers represent decreasing temperature 'levels' (same as $T - s$ diagram)
- Stream labels by 'pressure level'; i.e., *(h)* for high pressure, *(l)* for low pressure.

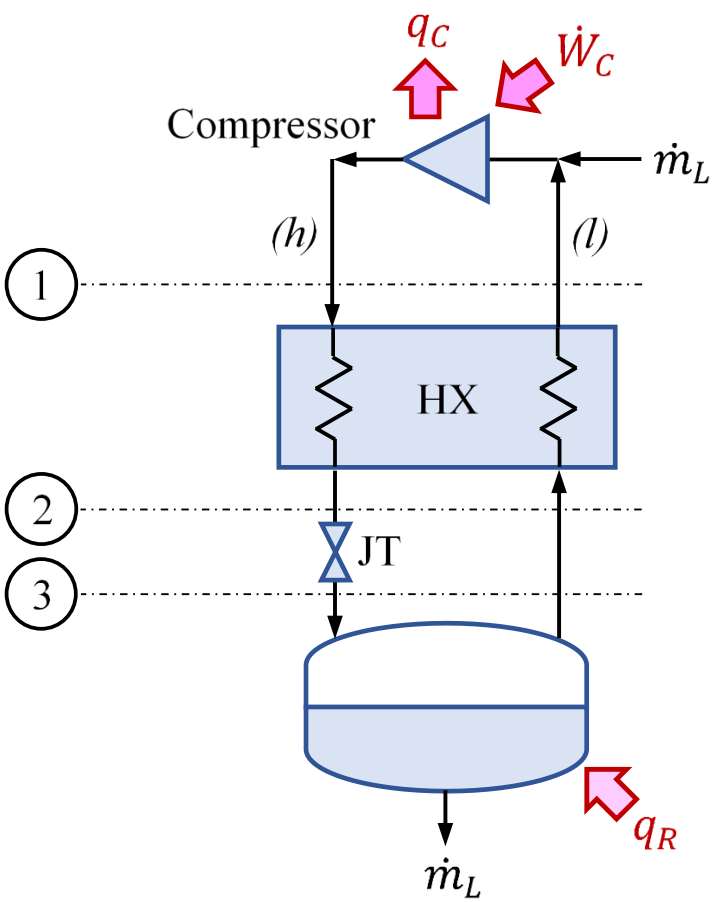

- For a Pure Refrigerator, $\dot{m}_L = 0$
- Applying the first law for a steady process,

$$\dot{m}_h h_{h,1} - \dot{m}_l h_{l,1} + \dot{q}_R = 0$$

- And, from mass conservation (for a steady process),

$$\boxed{\dot{m}_h - \dot{m}_l = 0}$$ *(unlike a liquefier !)*

- So, $\dot{q}_R = \dot{m}_h \Delta h_{lh,1}$
  - Where, $\Delta h_{lh,1} = h_{l,1} - h_{h,1}$

Joule Thompson (JT) Refrigerator [2]

- Notice that the enthalpy flux is written as, $(h_{l,1} - h_{h,1})$, as opposed to, $(h_{h,1} - h_{l,1})$
- That is, for the JT refrigerator to work (i.e., support the refrigeration load, q_R), a necessary condition is,

$$\Delta h_{lh,1} > 0$$

Which is only possible for a real gas !

- For a perfect ideal gas,

$$\Delta h_{lh,1} = h_{l,1} - h_{h,1} = C_p\left(T_{l,1} - T_{h,1}\right)$$

- Since the *(h)* stream is being cooled, it would be a second law violation (under steady conditions) for, $T_{l,1} > T_{h,1}$ for a real (or ideal) fluid.

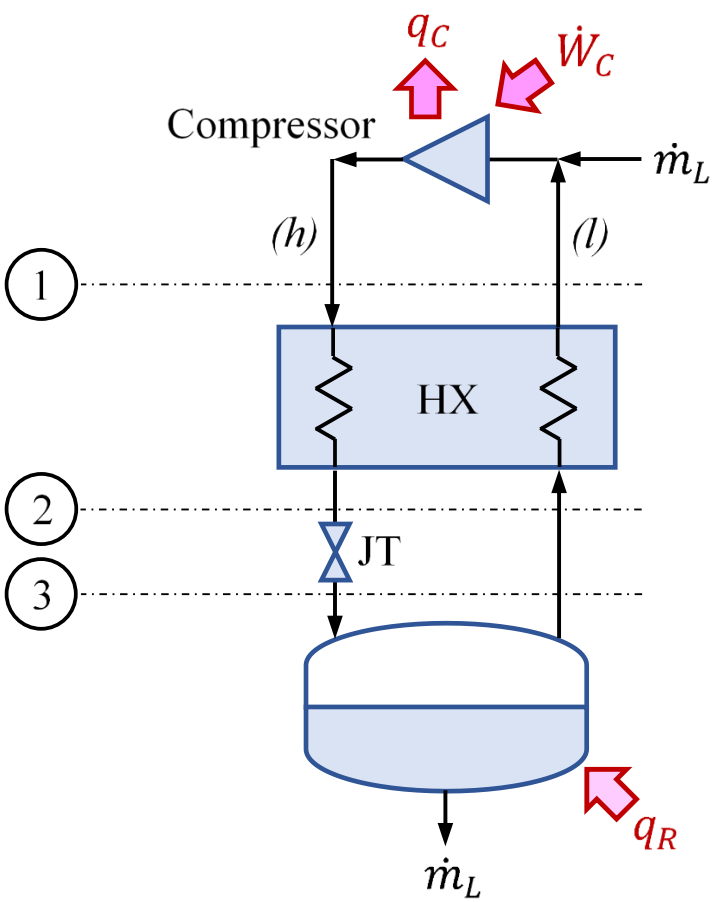

Joule Thompson (JT) Refrigerator [3]

- *Case (a):* Enthalpy decreases at constant temperature and increasing pressure. Gas expansion through the JT valve results in a lower temperature (solid red line)
- *Case (b):* Enthalpy increases at constant temperature and increasing pressure (dashed red line). Gas expansion through the JT valve results in a higher temperature (dashed red line)
- So, in case (b), the fluid will not allow us to even cool-down, let alone operate at steady conditions (even if we somehow already started at cold conditions).

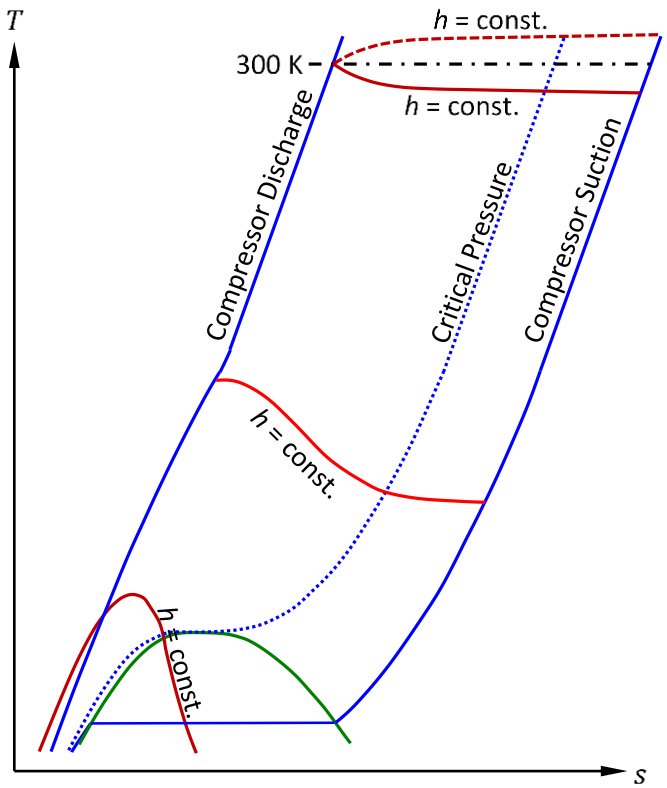

Joule Thompson (JT) Refrigerator [4]

- JT coefficient is defined as the partial derivative,

$$\mu_j = \left(\frac{\partial T}{\partial p}\right)_h$$

- Here is a plot of constant enthalpy lines (dashed green lines) on a pressure-temperature diagram for helium

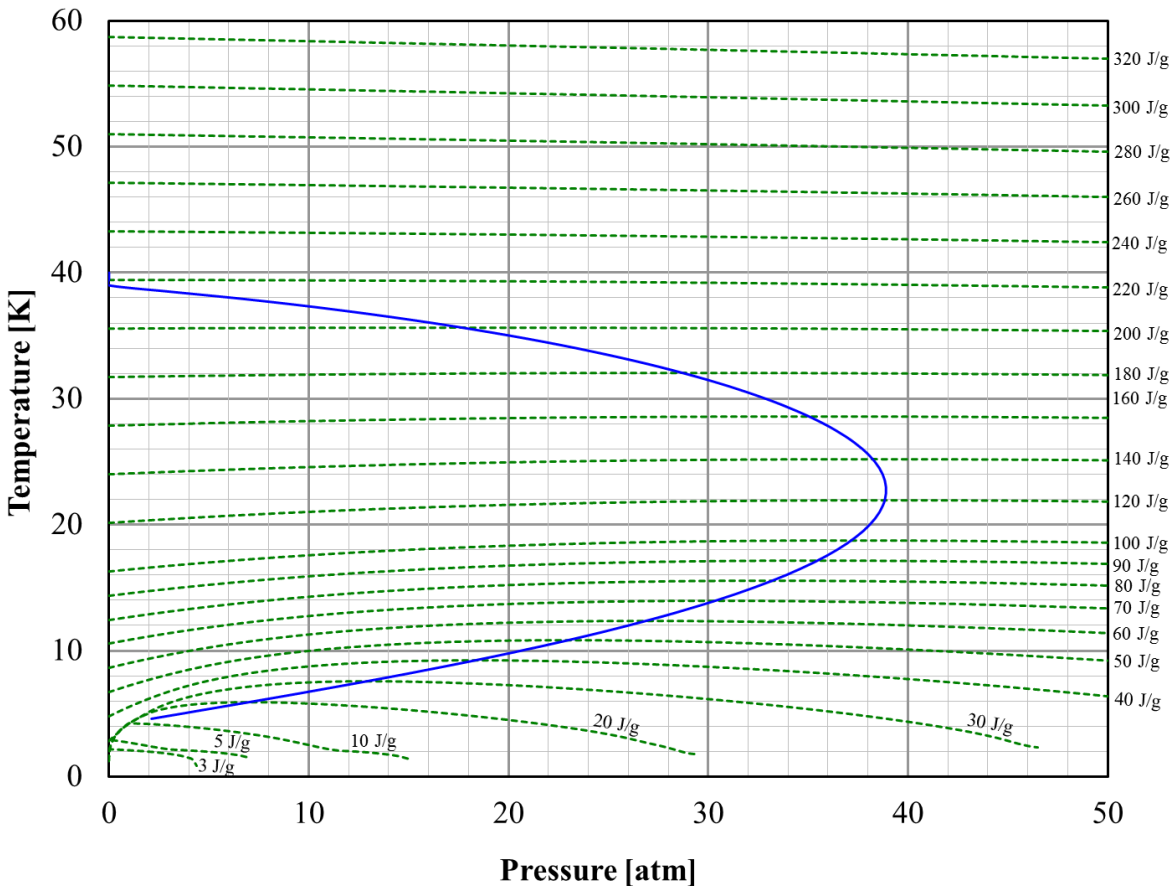

Joule Thompson (JT) Refrigerator [5]

- So, the 'slope' of these constant enthalpy lines is the JT coefficient
- Observe that above approx. 40 K, the JT coefficient (for helium) is always negative; i.e., no cooling will occur when the pressure is reduced at constant enthalpy
- This is called the maximum inversion temperature and varies with the fluid

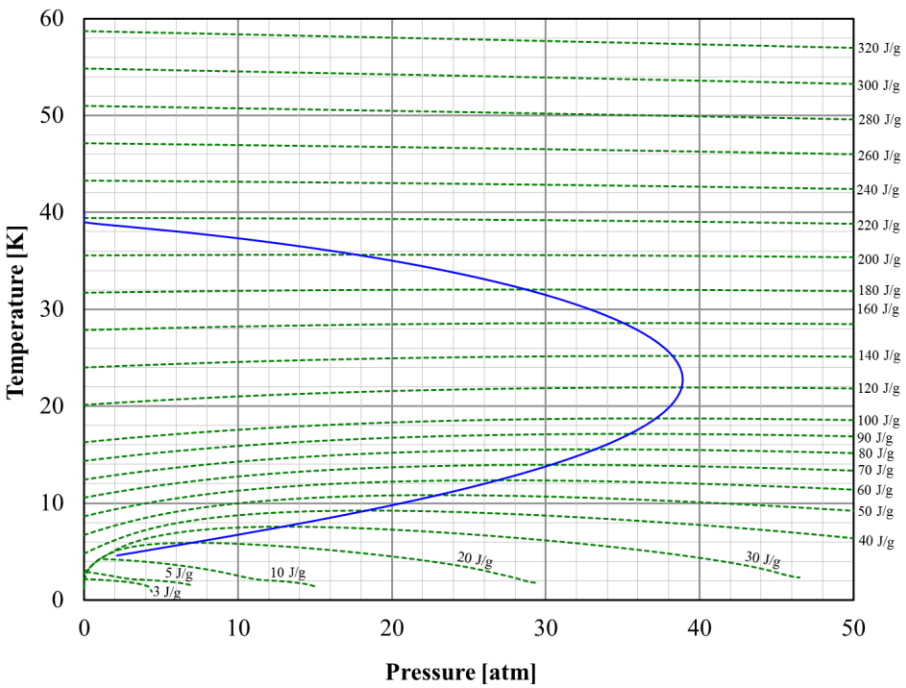

Joule Thompson (JT) Refrigerator [6]

- Table below shows the inversion temperature for selected fluids

Name	Symbol	R #	NBP	*R*	*a*	*b*	$T_{i,max}^{\circ}$	$T_{i,max}$
			[K]	[J/kg-K]	[Pa-m^6/kg^2)]	[m^3/kg]	[K]	[K]
Oxygen	O_2	R-732	90.19	259.8	135.0	0.0009956	1043	757
Argon	Ar	R-740	87.30	208.1	85.33	0.0008062	1017	763
Nitrogen	N_2	R-728	77.35	296.8	174.3	0.001379	852	607
Neon	Ne	R-720	27.10	412.0	52.90	0.0008550	300	220
Deuterium	D		23.66	2064	1573	0.005890	259	211
Hydrogen	H_2	R-702	20.37	4124	6082	0.01318	224	201
Helium-4	He	R-704	4.22	2077	218.9	0.006009	35.1	45.2

- Where, $T_{i,max}^{\circ}$, is computed using van der Waals equation, and, $T_{i,max}$, is computed using CoolProps

- We can see from this table that Neon, (Deuterium), Hydrogen, and Helium must be pre-cooled below ambient temperature for the JT process

Reversed-Modified Brayton Process [1]

- Reversed – because it is used for refrigeration rather than power generation
- Modified – because it has isothermal compression and isentropic expansion
- Recall a Brayton cycle has isentropic compression and expansion
- Note that this process provides <u>non-isothermal</u> cooling

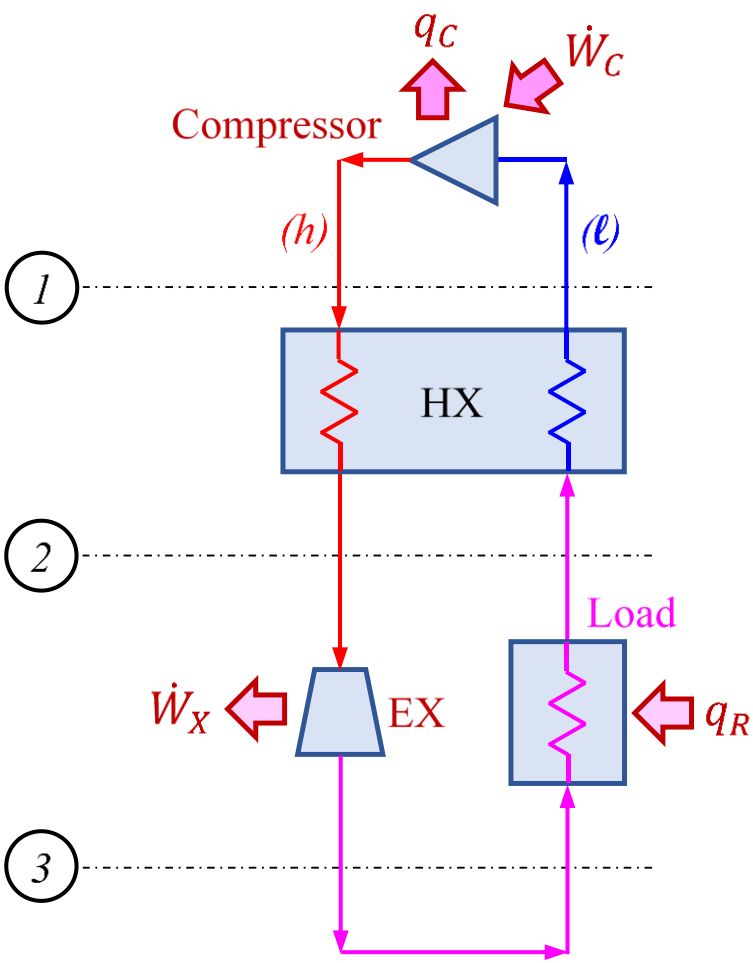

Reversed-Modified Brayton Process [2]

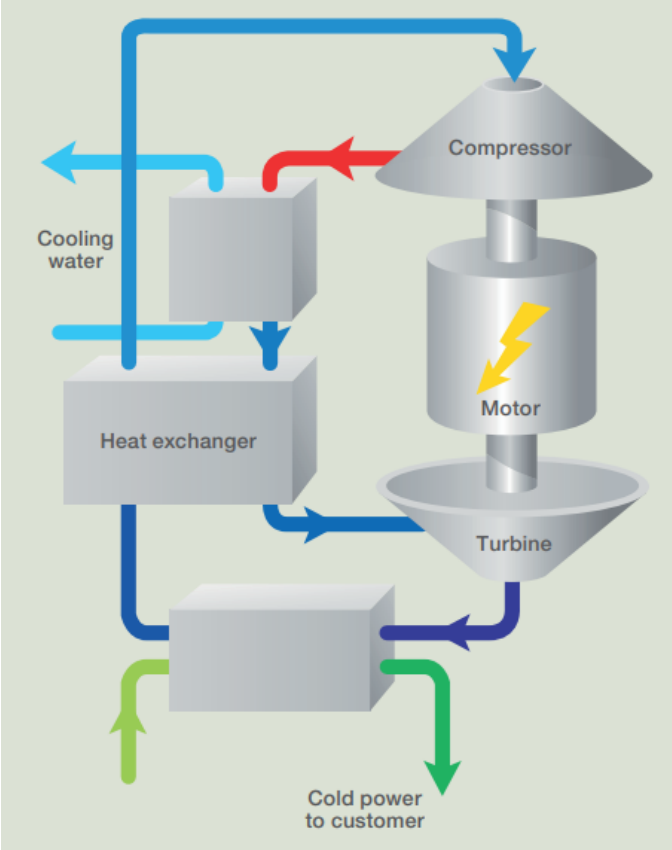

Image Courtesy:
Air Liquide Advance Technologies

- Requires a load heat exchanger, and a separate cooling fluid loop.
- Cooling fluid can be the same as process fluid or different.
- Can be used for isothermal refrigeration, as a re-liquefier of saturated vapor.
- Some major applications –
  - Onboard the International Space Station (ISS)
  - Off-shore re-liquefier for LNG

Claude Process

- Think of this as a super-position of a Brayton process-stage and a JT process-stage
- With the Brayton stage providing sensible cooling of the mass flow ($\dot{m}_{h.3}$) from, $T_{l,3}$, to, $T_{l,4}$
- Since this additional cooling is provided, less input exergy is required from the compressor, than would otherwise be needed for a pure JT process supporting the same load (liquefaction or refrigeration)

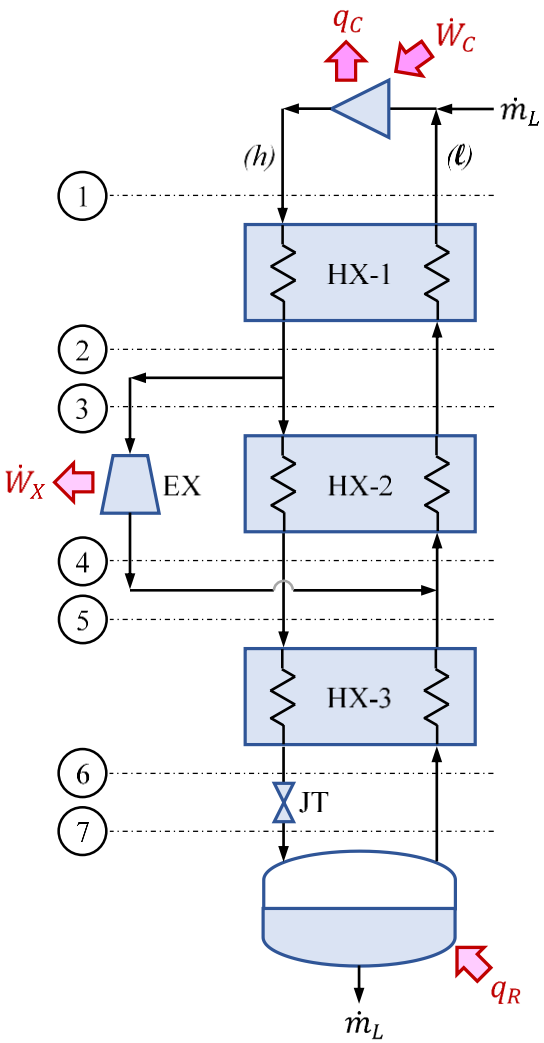

Collins Process [1]

- This cycle consists of two Brayton process-stages and a JT process-stage at the cold end
- Cycle is named after Sam Collins (MIT) who pioneered practical helium liquefiers, developing the equipment-technology that has made them available in laboratories doing low temperature research world-wide
- He recognized that two expansion stages were necessary (~16:1 pressure ratio) for a practical helium liquefier

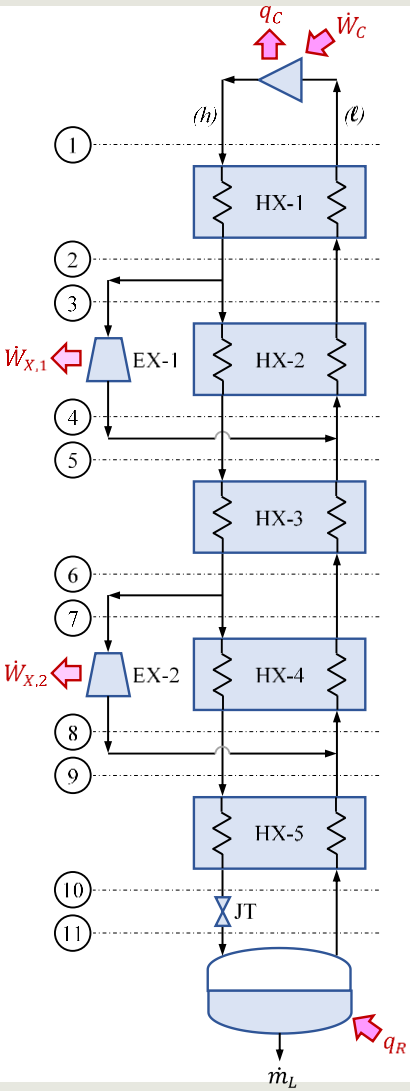

Collins Process [2]

- Peter (Pyot) Kapitza (1934) was the first to use an expansion engine (of his design) to produce liquid helium
- However, it was the development of S.C. Collin's 1946 liquefier with its flexible rod piston expanders at MIT, which was subsequently commercialized by Arthur D. Little (ADL), Inc. that made helium liquefier's common place
- Later Collins designed and built the Model 2000 and the highly successful and well known Model 1400 helium liquefiers
- These used a piston-displacer expander consisting of a 3 inch diameter solid phenolic-plastic bar with the seal, a Buna rubber O-ring, at the warm end

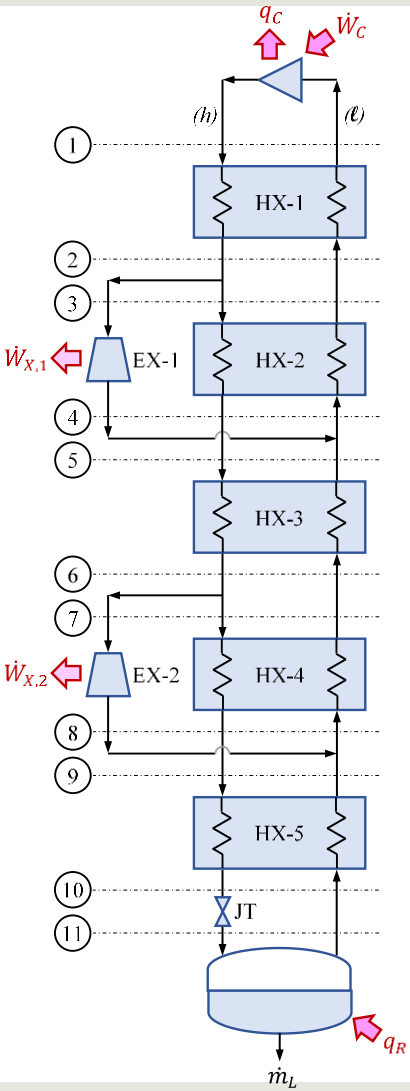

Collins Process [3]

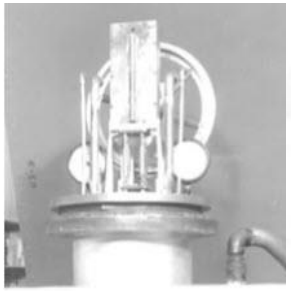

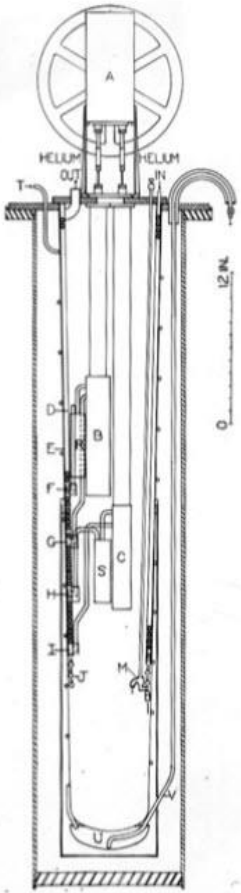

Collins Process [4]

- (Now) Linde model 1410 (can produce LHe up to ~ 50 liters/hr.)

Image Courtesy: Linde Cryogenics

Collins Process [5]

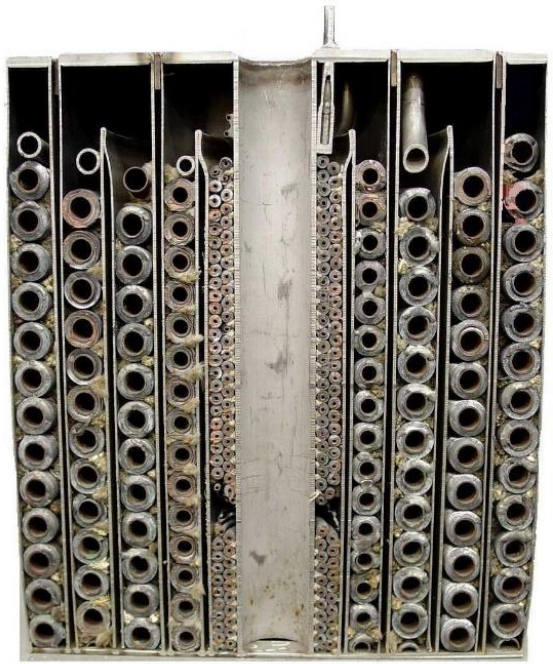

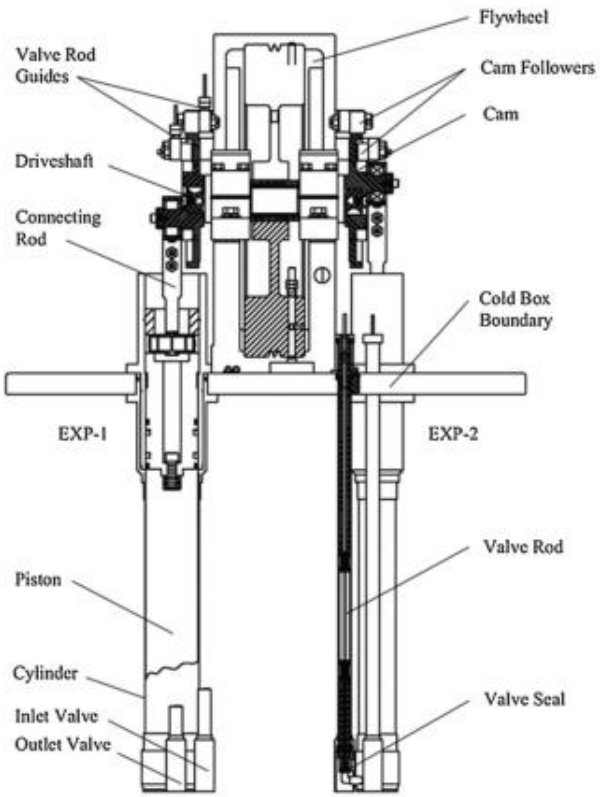

Image Courtesy: The Saga of Cryogenic Refrigeration (2022)

Large Scale Helium Cryogenic Systems

Large Scale Helium Cryogenic Systems

- What does cryogenics at FRIB look like?
  - FRIB is large scale facility – similar to an air separation or to liquid natural gas (LNG) process plant









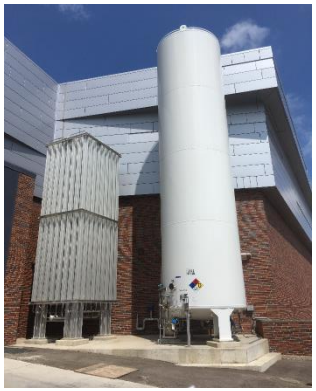


Large Scale Helium Cryogenic Systems: Sub-Systems

Major Helium Refrigerator Sub systems:

- Warm (Helium) Gas Storage
- Warm compressors
  - *Compressor skids*
  - *Gas management*
  - *Bulk oil removal*
- Oil Removal System
  - Ads. Beds
  - Coalescing Filters
- Gas Purification System
- Cryogenic Storage (Dewar)
- 4.5 K Helium Refrigerator (Cold Box)
  - LN Pre-cooling
  - Expansion Stages
  - Heat Exchangers
- 2.0 K (Sub-Atm) Refrigerator
  - Vacuum Pump
  - Cryogenic Centrifugal Compressors
  - Heat Exchangers
- Cryogenic Distribution System
- Cryostats
  - Cryo-modules
  - Superconducting Magnets

Large Scale Helium Cryogenic Systems: Overall Layout

Simplified (Typical) Block Diagram of a Large Scale Cryogenic System for Accelerators:

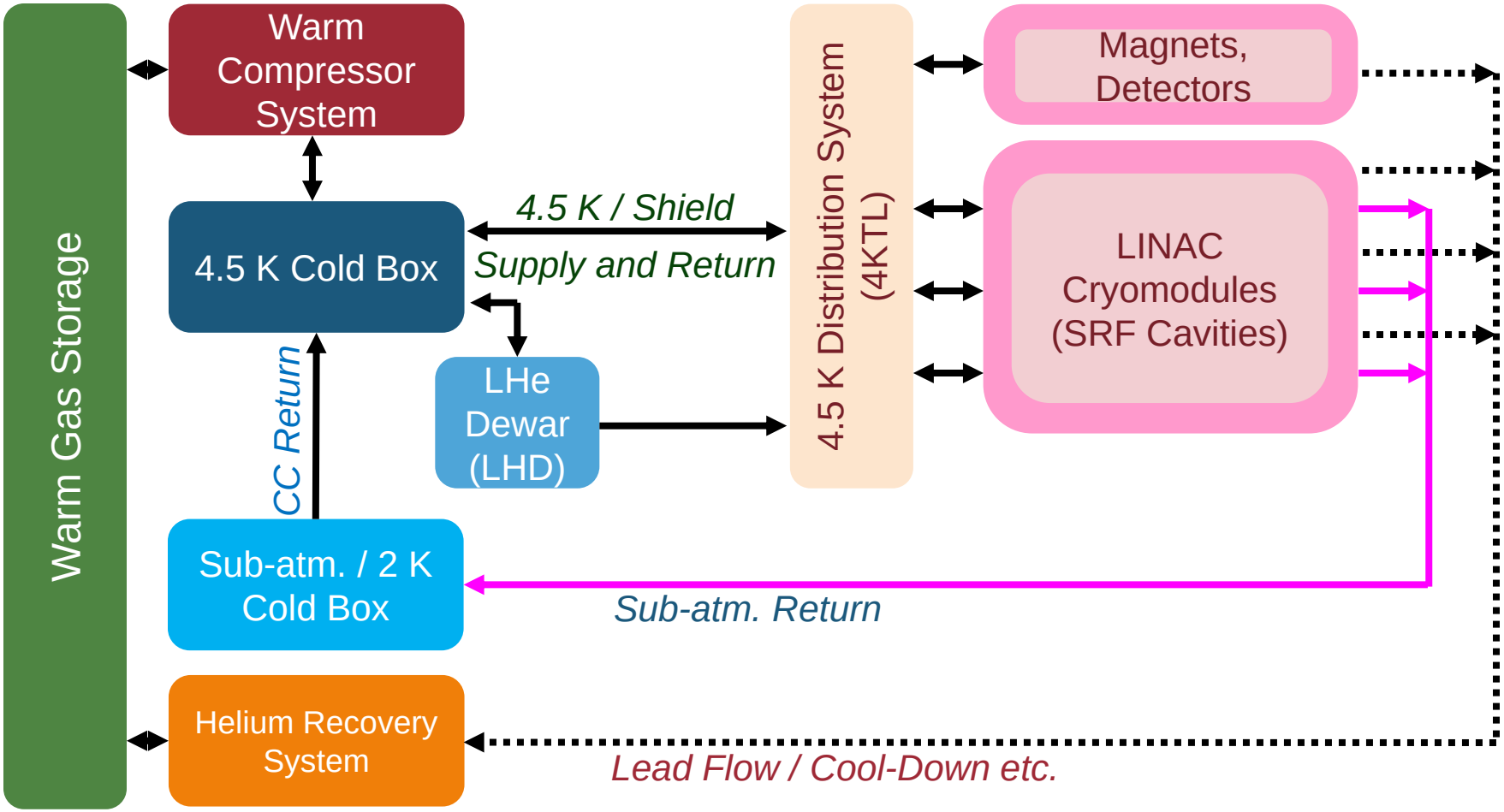

Warm Gas (Helium) Compressor System

Warm Gas (Helium) Compressors [1]

- Compressors (isothermal):
  - Used as the 'prime movers' for modern helium systems
  - Most helium refrigeration systems use rotary screw compressors (also known as twin screw compressor)
  - These are their own sub-system
  - Provide the availability, or exergy, to the refrigeration system

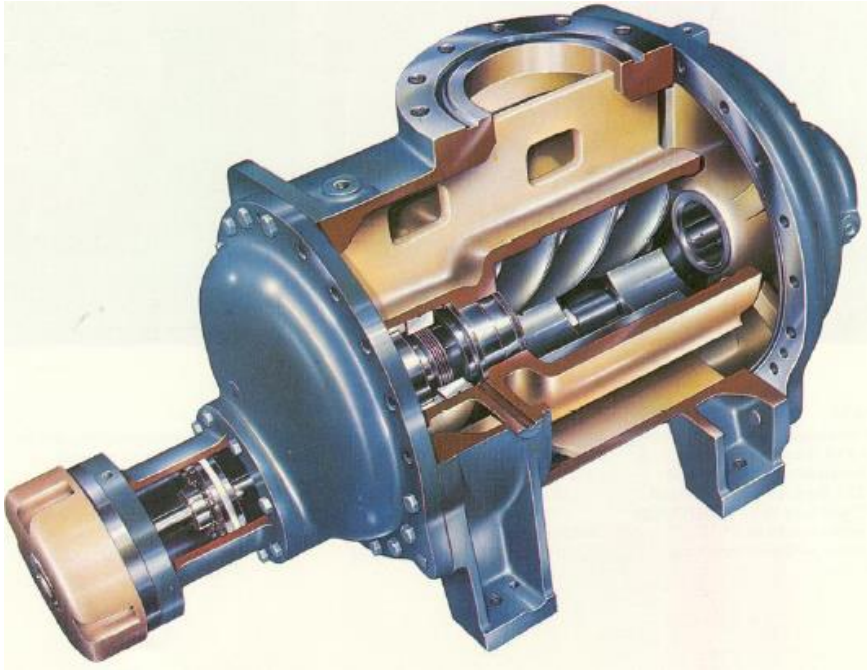

Rotary Screw Compressor [1]

- Influence of the polytropic exponent (k) on the compression process and the temperature ratio for a pressure ratio of 3.5
- Since the isentropic exponent for helium is high (5/3), oil is injected into the helium gas to reduce the compression temperature so that normal materials and seals can be used in the construction of the compressors

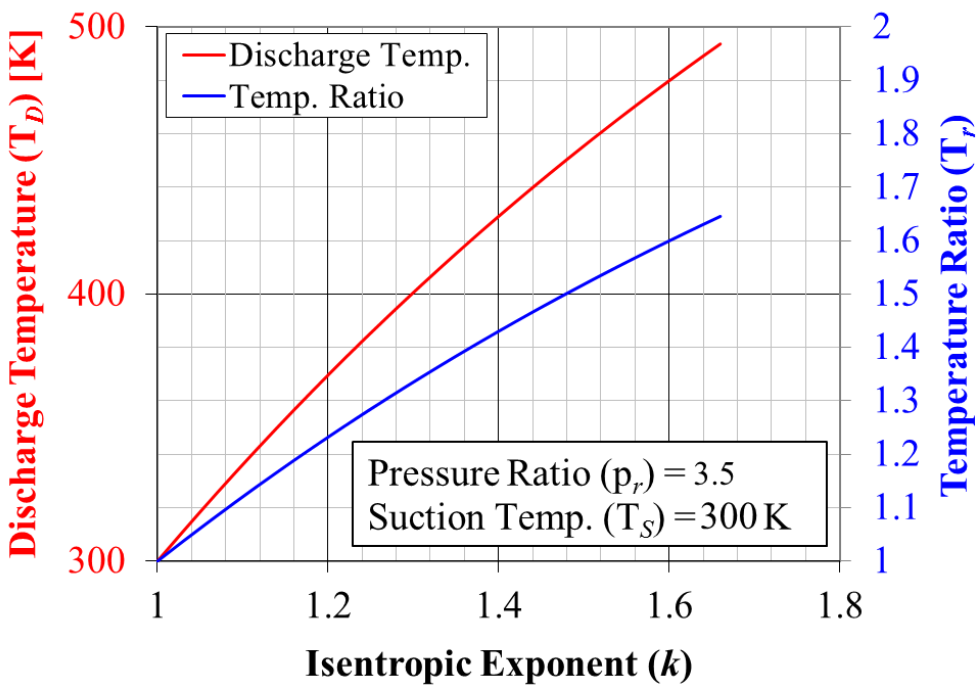

Rotary Screw Compressor [2]

- Helium compressors

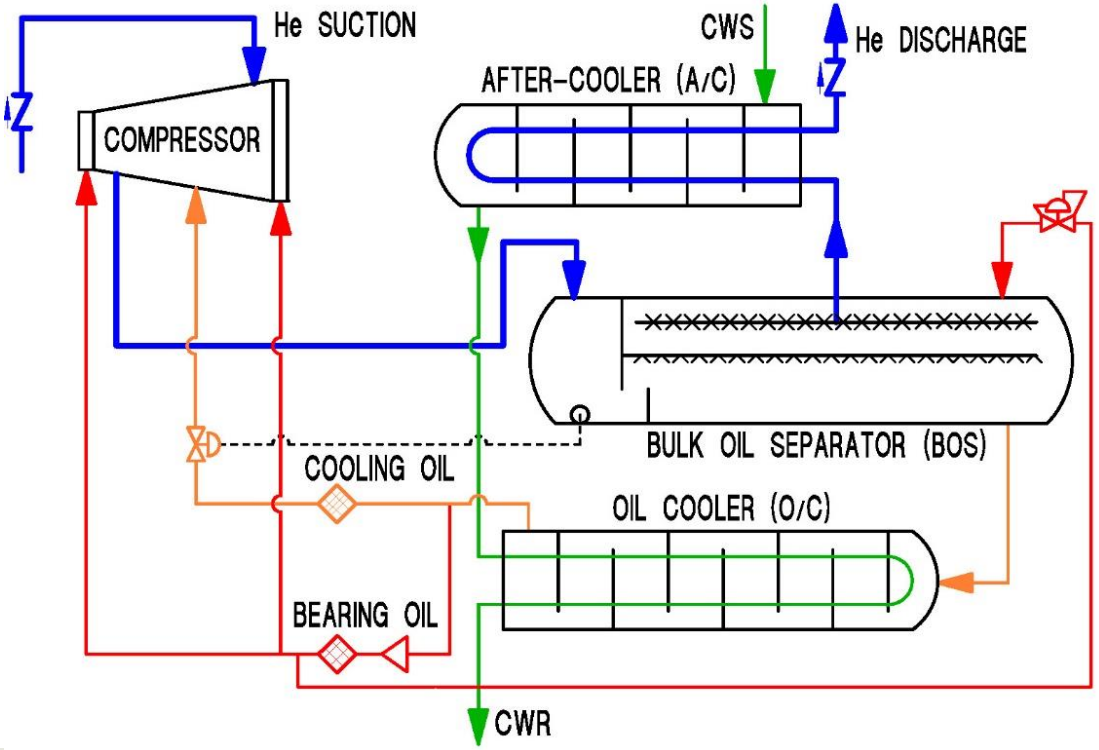

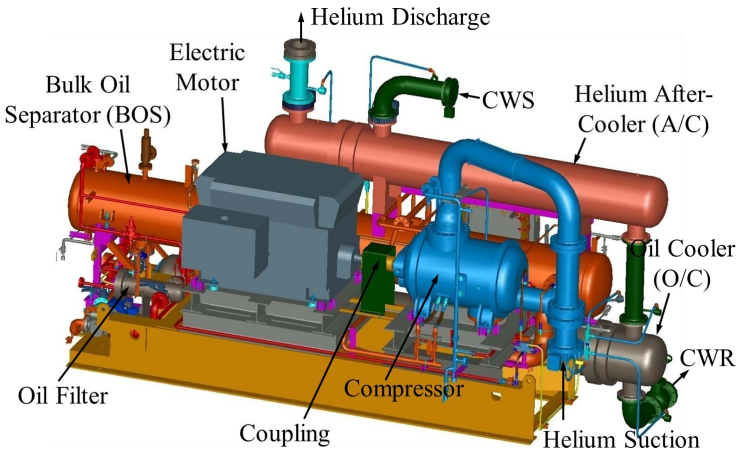

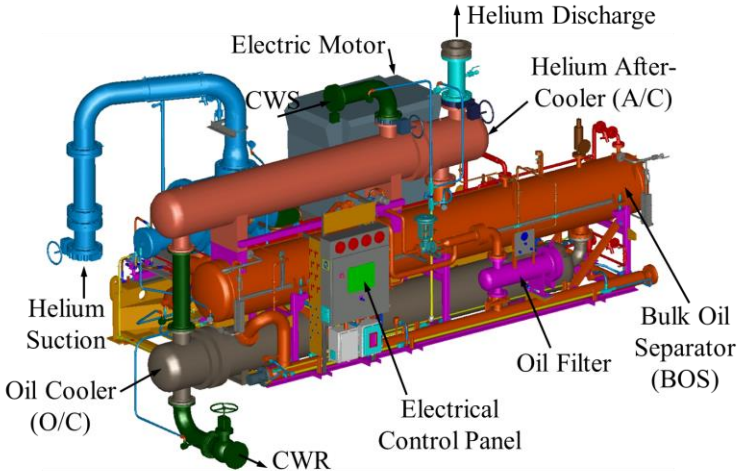

Rotary Screw Compressor [3]

- Typical volumetric efficiency (η_v) for a given BVR
  - Left: SSCL Sullair LP stage 2.2 BVR
  - Right: SSCL Sullair HP stage 2.6 BVR
- For a given BVR, and compressor stage (i.e., LP, MP, HP), the efficiency is primarily dependent on the pressure ratio (p_r)

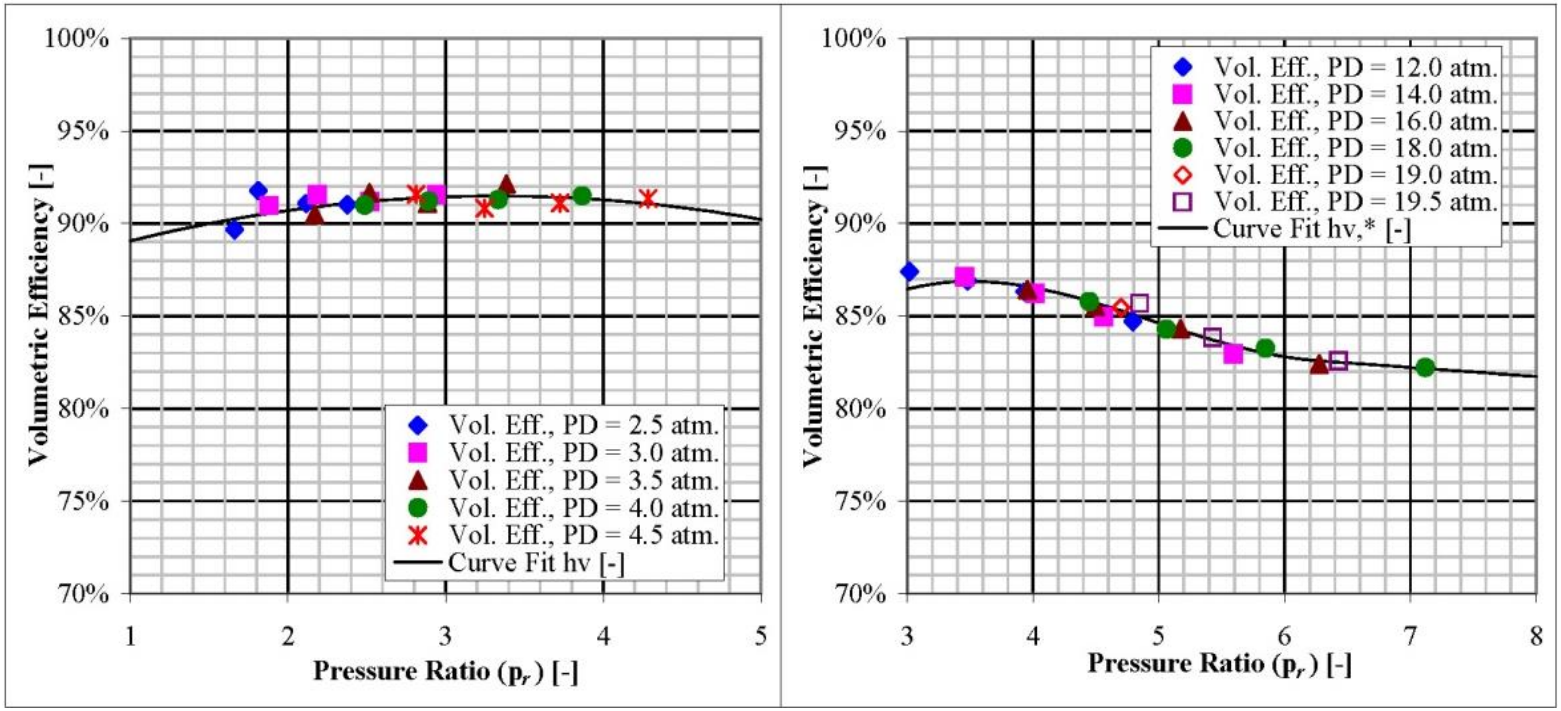

Rotary Screw Compressor [4]

- Typical isothermal efficiency (η_i) for a given BVR
  - Left: SSCL Sullair LP stage 2.2 BVR
  - Right: SSCL Sullair HP stage 2.6 BVR
- For a given BVR, and compressor stage (i.e., LP, MP, HP), the efficiency is primarily dependent on the pressure ratio (p_r)

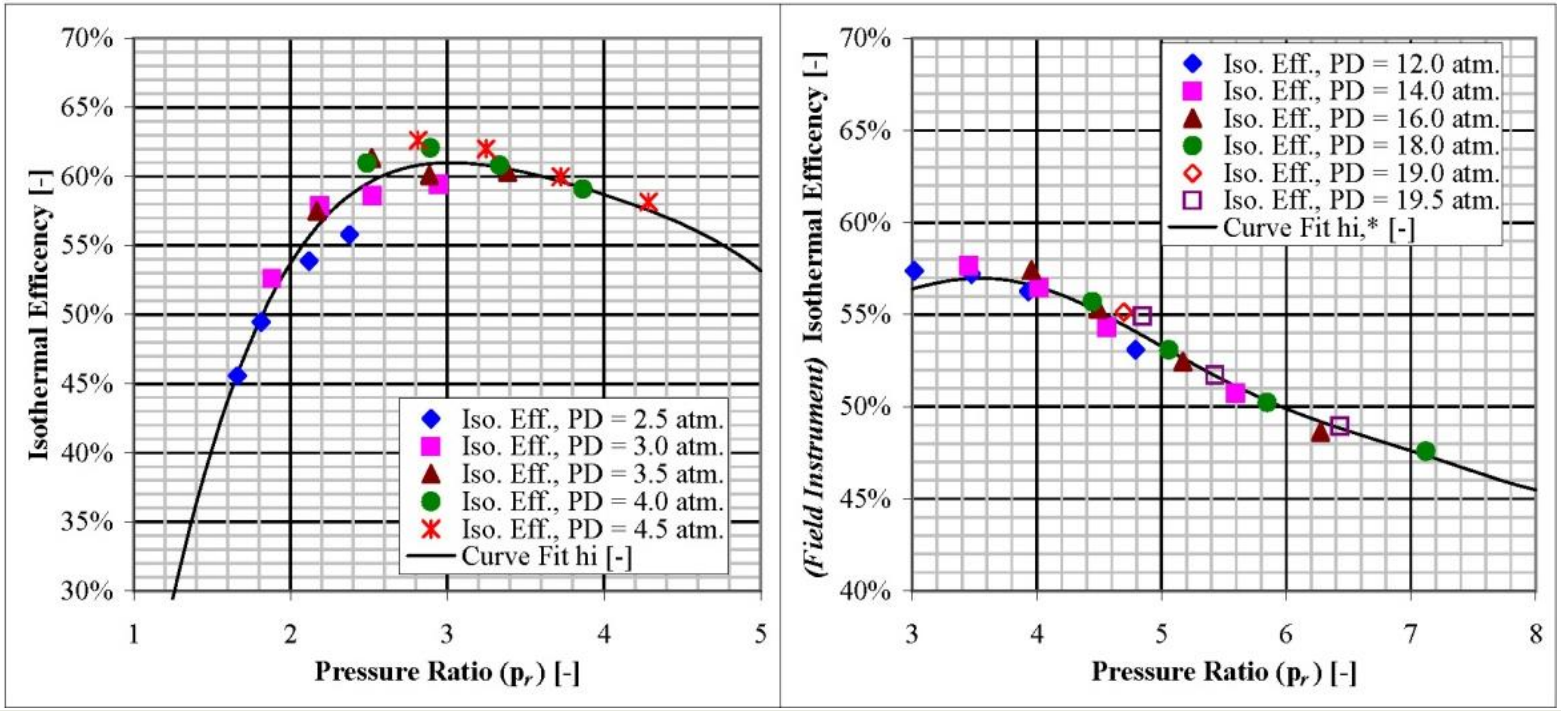

Warm Gas (Helium) Compressors [2]

Cooling Tower Loop

Process CW Loop

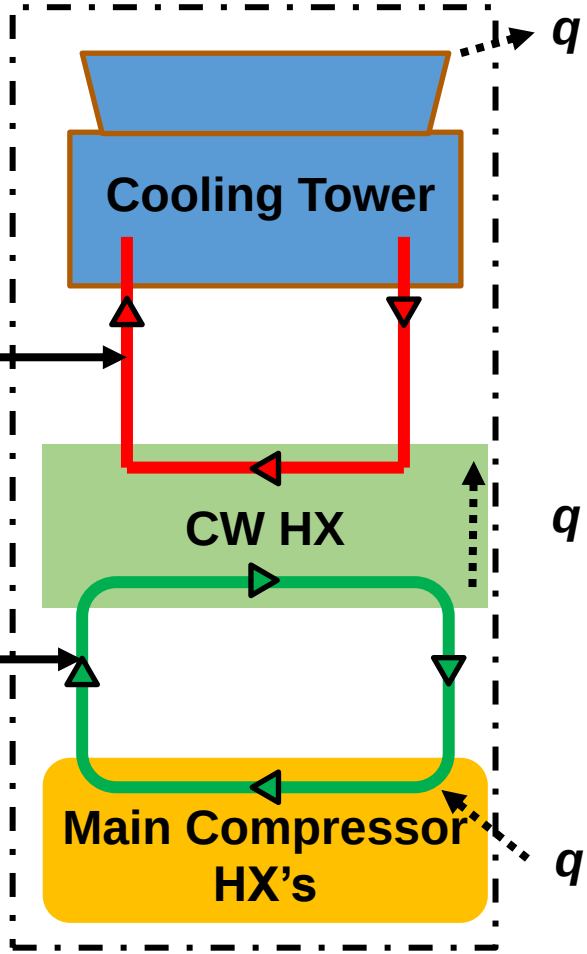

q — *Heat rejected to atmosphere*

q — *Heat rejected from process CW to Cooling Tower CW*

q — *Heat rejected from compressors to process CW*

Warm Gas (Helium) Compressors [3]

- Electrical input power = heat rejected out cooling towers
- Enthalpy into compressors = enthalpy out of compressors

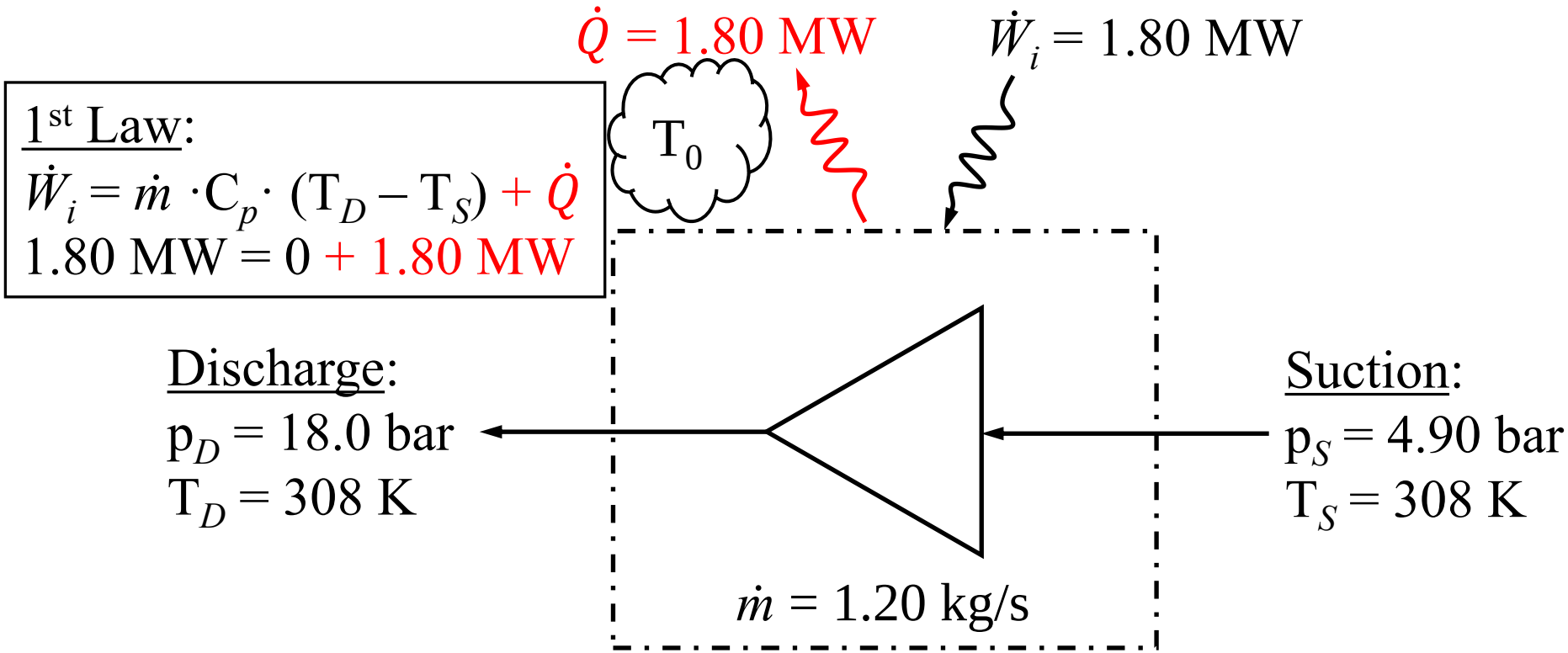

Isothermal Compression: $T_D = T_S = T_0$ ▶ $W_i = \dot{Q}$

Warm Gas (Helium) Compressors [4]

- Net enthalpy flux:
  - Essentially zero to the cold box + load

- The power put into the compressors did *not increase the energy of the helium*

$$\sum_i \dot{m}_i \cdot h_i = \Delta H = 0$$

- **So, what is really being supplied to the refrigerator to support the load?**

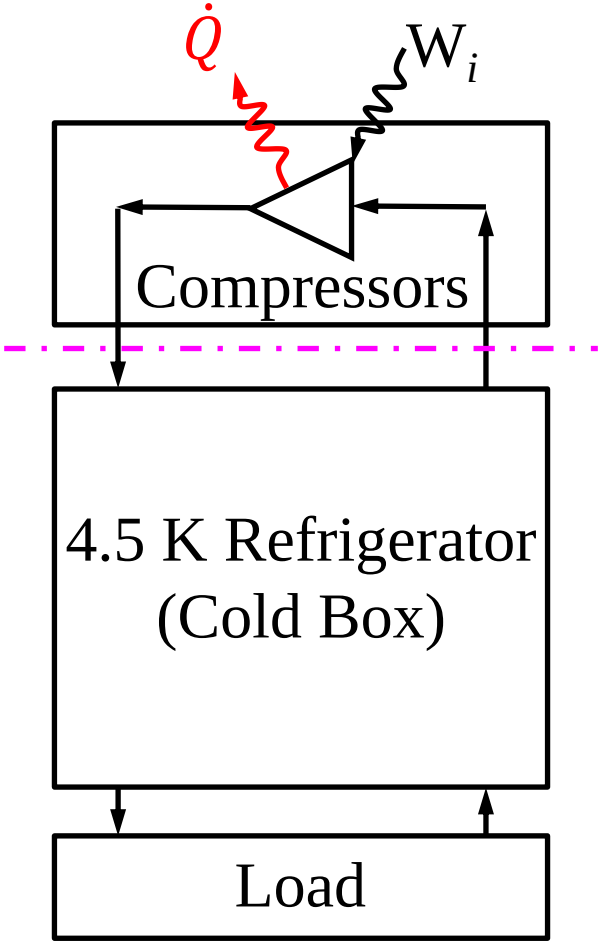

Isothermal (Gas) Compression [1]

- From the first law, the actual (shaft) input power is,

$$\dot{m}(h_1 - h_2) + \dot{W} - \dot{Q} = 0$$

$$\dot{W} = \dot{Q} - \dot{m}\,\Delta h_{12}$$

Where,

$$\Delta h_{12} = h_1 - h_2$$

- Note: that heat transfer has been defined here as positive out of the compressor

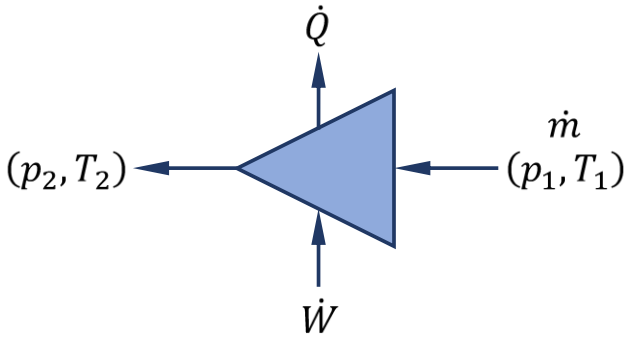

Isothermal (Gas) Compression [2]

- We designate the isothermal efficiency as,

$$\eta_T \equiv \frac{\dot{W}_{rev,T}}{\dot{W}} = \frac{Reversible - isothermal\ compression\ input\ power}{Actual\ shaft\ input\ power}$$

- Usually the shaft power is not measured (although it can be)
- Rather, the electrical input power supplied to the (electric) motor is measured
- The motor efficiency is a function of the fraction it is loaded (compared to the 'full' load),

$$\eta_m \equiv \frac{\dot{W}}{\dot{W}_m} = \frac{Actual\ (motor) shaft\ input\ power}{Actual\ motor\ input\ power}$$

Isothermal (Gas) Compression [3]

- The reversible-isothermal input power is,

$$\dot{W}_{rev,T} = \dot{m}\,\{\varepsilon_{2T}(p_2, T) - \varepsilon_1(p_1, T)\}$$

  - Where,

$$T = T_1,\ \varepsilon_1 = \varepsilon(p_1, T),\ \text{and},\ \varepsilon_{2T} = \varepsilon(p_2, T)$$

  - Sub-script *"2T"* indicates the discharge is at the same temperature (isothermal) as the suction

- So,

$$\dot{W}_{rev,T} = \dot{m}\{(h_{2T} - h_1) - T_0\,(s_{2T} - s_1)\}$$
$$\dot{W}_{rev,T} = \dot{m}\{T_0\,\Delta s_{12,T} - \Delta h_{12,T}\}$$

  - With,

$$\Delta h_{12,T} = h_1 - h_{2T}$$
$$\Delta s_{12,T} = s_1 - s_{2T} > 0$$

Isothermal (Gas) Compression [4]

- If we assume that the gas is an ideal gas, and one with a constant specific heat, then, by definition of the process,

$$h_1 - h_2 = C_p(T_1 - T_2) = 0$$

- Also, for an ideal gas, the change in entropy for an isothermal process is,

$$\Delta s = s_1 - s_2 = C_p\left\{\ln\left(\frac{T_1}{T_2}\right) + \phi \ln\left(\frac{p_2}{p_1}\right)\right\} = \phi\, C_p \ln\left(\frac{p_2}{p_1}\right)$$

- The reversible work is then,

$$\dot{W}_{rev,T} = \dot{m}\{T_0\, \Delta s_{12,T} - \Delta h_{12,T}\} = \dot{m}\, T_0 \phi\, C_p \ln\left(\frac{p_2}{p_1}\right)$$

  - Where $R = \phi\, C_p$ and $\varphi = {}^{\gamma-1}/_{\gamma}$

Isothermal (Gas) Compression [5]

- The compression work is, $W = -\int p\, dV$
- From the ideal gas law for an isothermal process (and no mass leakage during the compression),

$$p\, V = m\, R\, T \;\rightarrow p\, dV + V\, dp = 0$$

- So the compression work is,

$$W = \int V\, dp = m\, R\, T \int_{p_1}^{p_2} \frac{dp}{p} = m\, R\, T\, \ln\left(\frac{p_2}{p_1}\right)$$

- Differentiating this w.r.t. time, and substituting, $R = \phi\, C_p$,

$$\dot{W} = \dot{m}\, T \phi\, C_p \ln\left(\frac{p_2}{p_1}\right)$$

- So, this also gives us the heat transfer, since, $\dot{W} = \dot{Q}$ (for an ideal gas with a constant specific heat)

Isothermal (Gas) Compression [7]

- The irreversibility is,

$$\dot{I} = \dot{W} - \dot{W}_{rev,T} = \left(\frac{1}{\eta_T} - 1\right)\dot{W}_{rev,T}$$

$$\dot{I} = \left(\frac{1}{\eta_T} - 1\right)\dot{m}\, T_0 \phi\, C_p \ln\left(\frac{p_2}{p_1}\right)$$

- Also,

$$\dot{I} = \dot{W} - \dot{W}_{rev,T} = \dot{m}\, T \phi\, C_p \ln\left(\frac{p_2}{p_1}\right) - \dot{m}\, T_0 \phi\, C_p \ln\left(\frac{p_2}{p_1}\right)$$

$$\dot{I} = \dot{m}(T - T_0)\phi\, C_p \ln\left(\frac{p_2}{p_1}\right)$$

- For a real process, there must be a finite temperature difference from the fluid being isothermally compressed to the environment; i.e.,

$$T - T_0 > 0$$

- So,

$$\dot{I} > 0$$

FRIB Warm Compressor Skids [1]

- FRIB Main Compressor

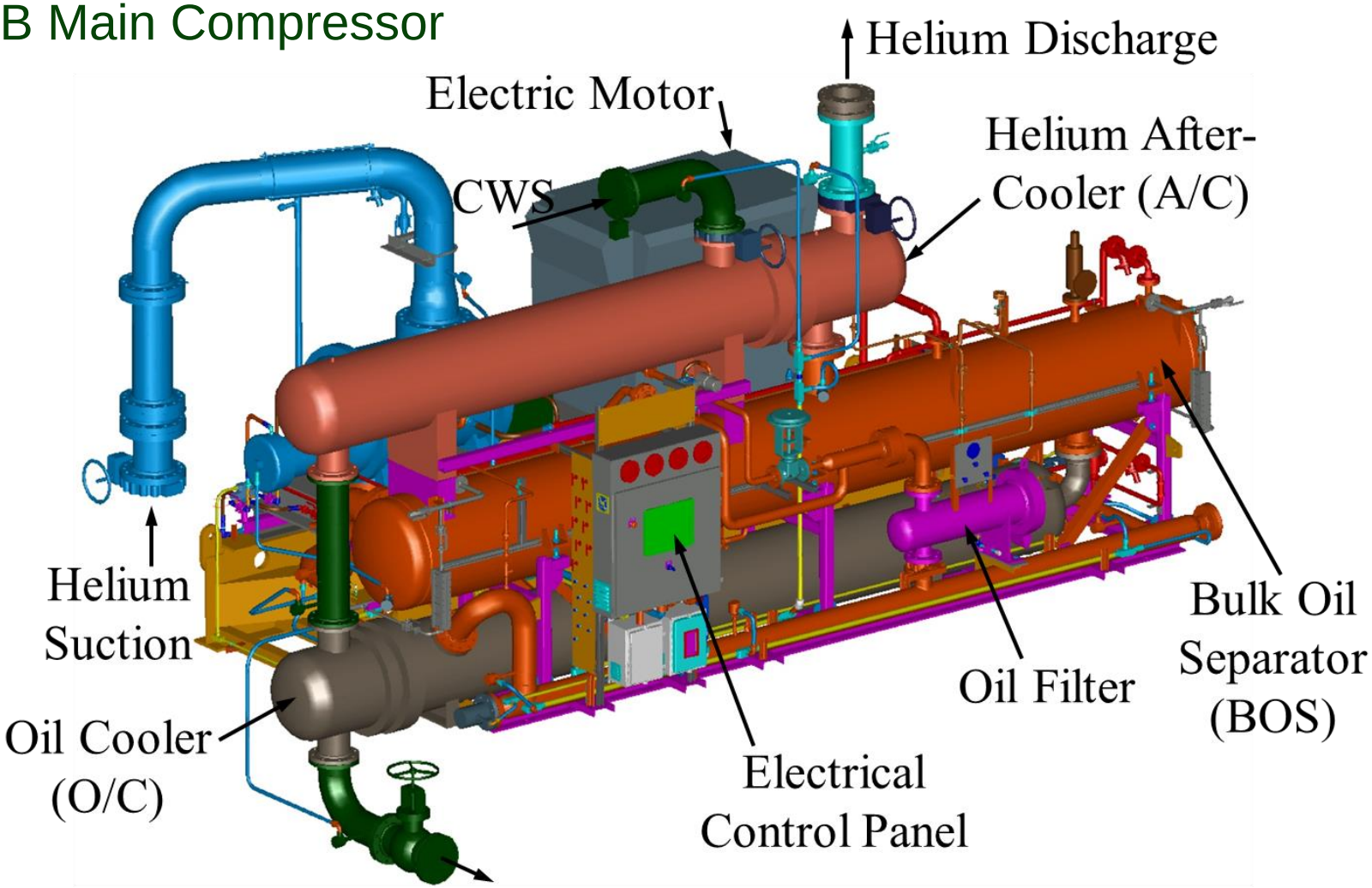

FRIB Warm Compressor Skids [2]

- FRIB Main Compressor

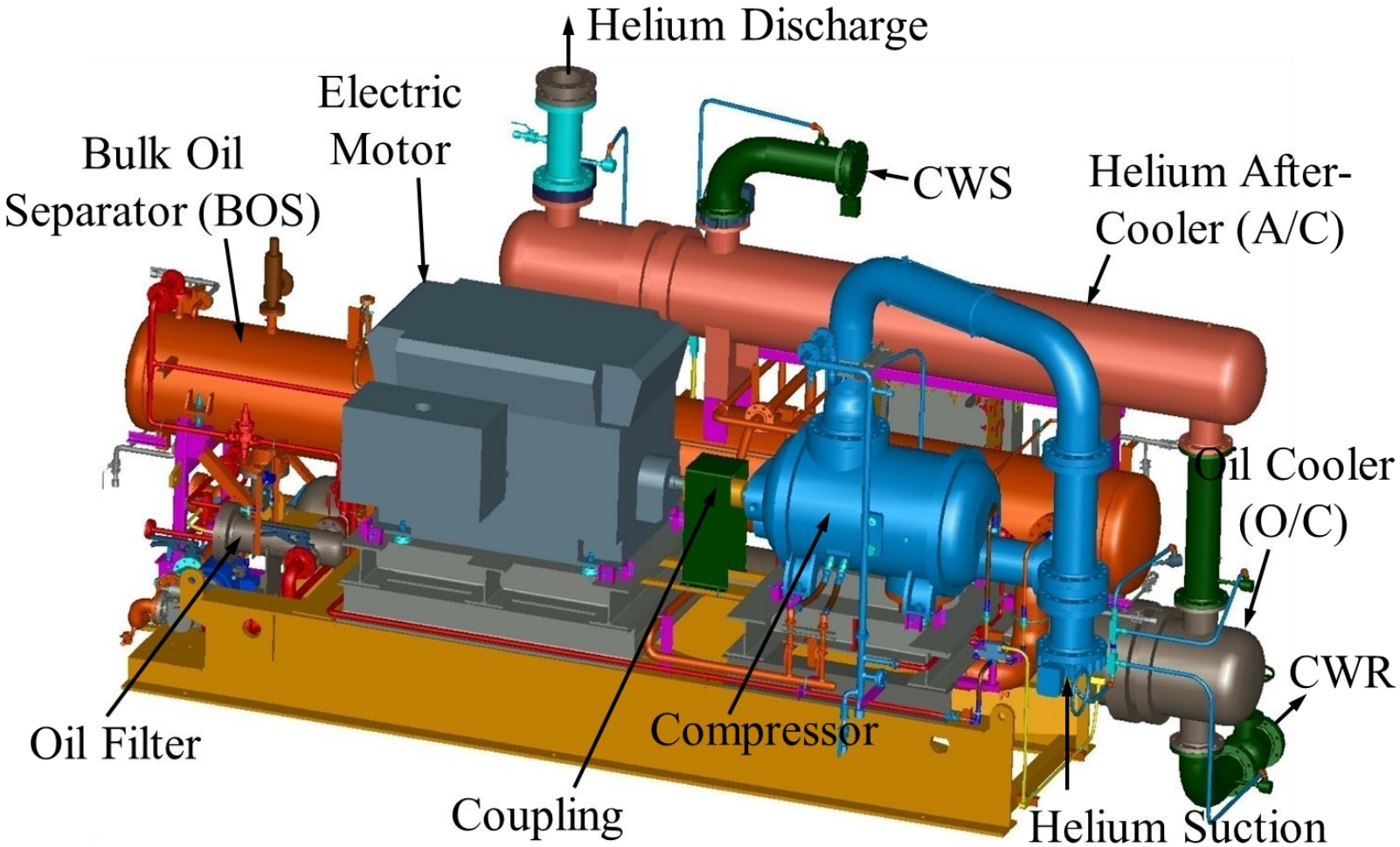

FRIB Warm Compressor System [1]

- Used *to increase the thermodynamic availability* of the helium gas by effectively *isothermally* pressurizing the gas

	LPL Stage	LP Stage	MP Stage	HP Stage
No. of Units	1	2	1	2
Compressor Model No.	WLVi 321/220	WLVi 321/193	WLVi 321/165	WLViH 321/193
Suction Swept Volume	35.526 l/rev	29.979 l/rev	26.649 l/rev	29.979 l/rev
Motor Frame	4009	3508	3508	4512
Full-load amperage (FLA)	124	99	99	305
Motor Rating	746 kW	597 kW	597 kW	1864 kW

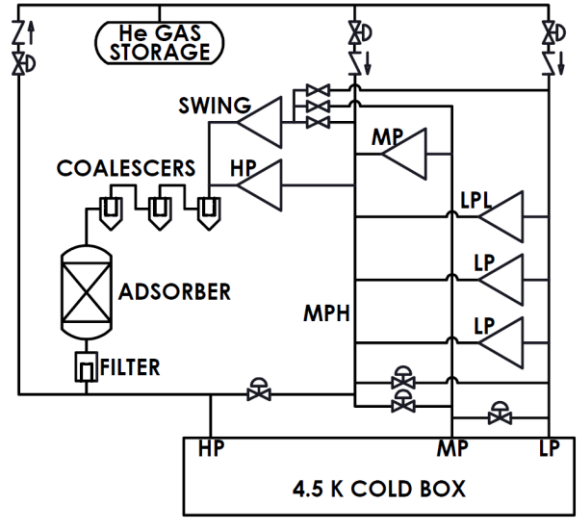

Oil Removal (Main Compressor Sub-System)

- Use to remove oil (liquid and vapor) from helium gas prior to being supplied to the 4.5 K cold box
- Oil (coating) on cold box heat exchangers would significantly degrade heat exchanger performance, and oil could permanently damage cold box turbines
- Usually comprised of three stages of glass-fiber coalescing elements, followed by an activated carbon adsorber and filter (5 μm abs.)

FRIB Final Oil Removal System

4.5 K Refrigeration System

4.5 K Refrigeration System [1]

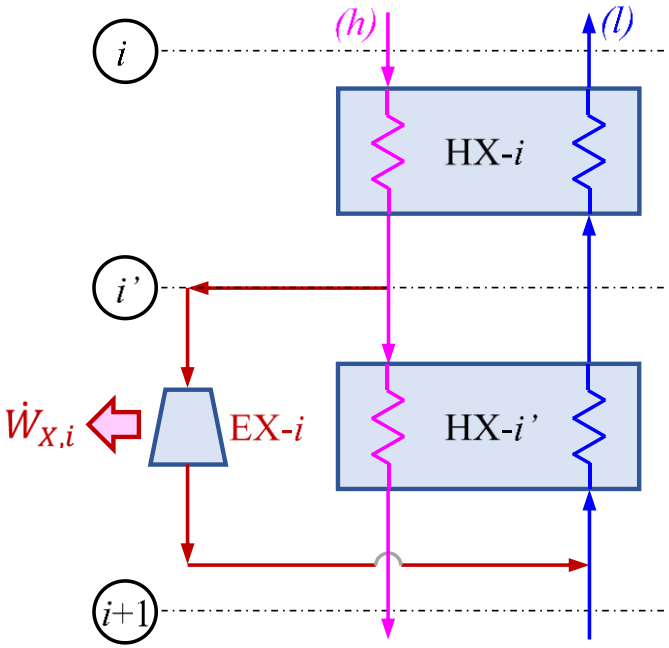

- Many of the present large-scale helium refrigerator / liquefiers will have 4 expansion stages (including a JT stage)
- Efficiency (operating cost) vs. capital cost of equipment plays a major role
- But what is the (process) optimum to minimize the input work (compressor mass flow)
- For an ideal liquefier for helium (300 – 4.5 K), with an expander pressure ratio of 16:1, the optimum number of expansion stage (also referred as 'Carnot' stage) is ~ 4.0
- See *P Knudsen, V Ganni, Simplified Helium Refrigerator Cycle Analysis Using the 'Carnot Step' (2006)*

4.5 K Refrigeration System [2]

- At FRIB, the maximum capacity of the 4.5 K refrigeration system is approx. 18.5 kW at 4.5 K (equivalent refrigeration); i.e.,
  - 180 g/s of Cold Compressor (CC) return flow (1.16 bar, 30 K)
  - 4.0 kW of 4.5 K Refrigeration
  - 14.0 g/s of 4.5 K Liquefaction
  - 20.0 kW of Shield Refrigeration (35-55 K)

4.5 K Refrigeration System [3]

- Upper cold box (300 K to 60 K):
  - Liquid nitrogen used to cool helium from 300 to 80 K
    - » Uses thermo-siphon with proper LN/VN phase separation
  - Dual carbon adsorber beds at 80 K to remove any remaining air contaminate
    - » Beds can be regenerated using electric heater bands
    - » Equipped with bed bypass
  - 4 aluminum-brazed plate-fin heat exchanger's in 4 cores

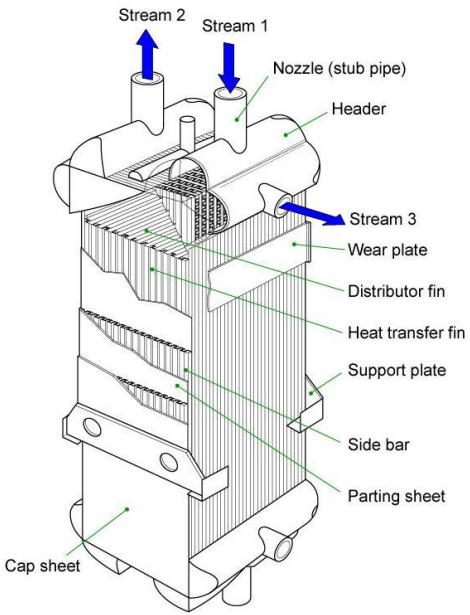

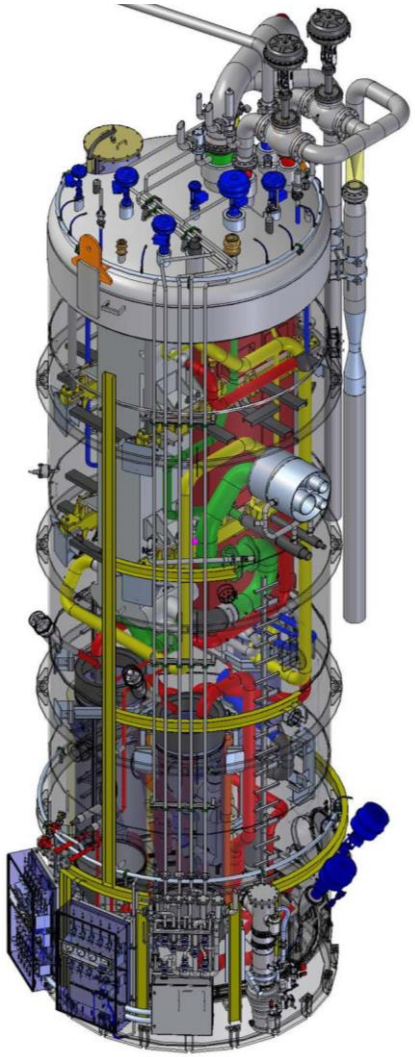

4.5 K Refrigeration System [4]

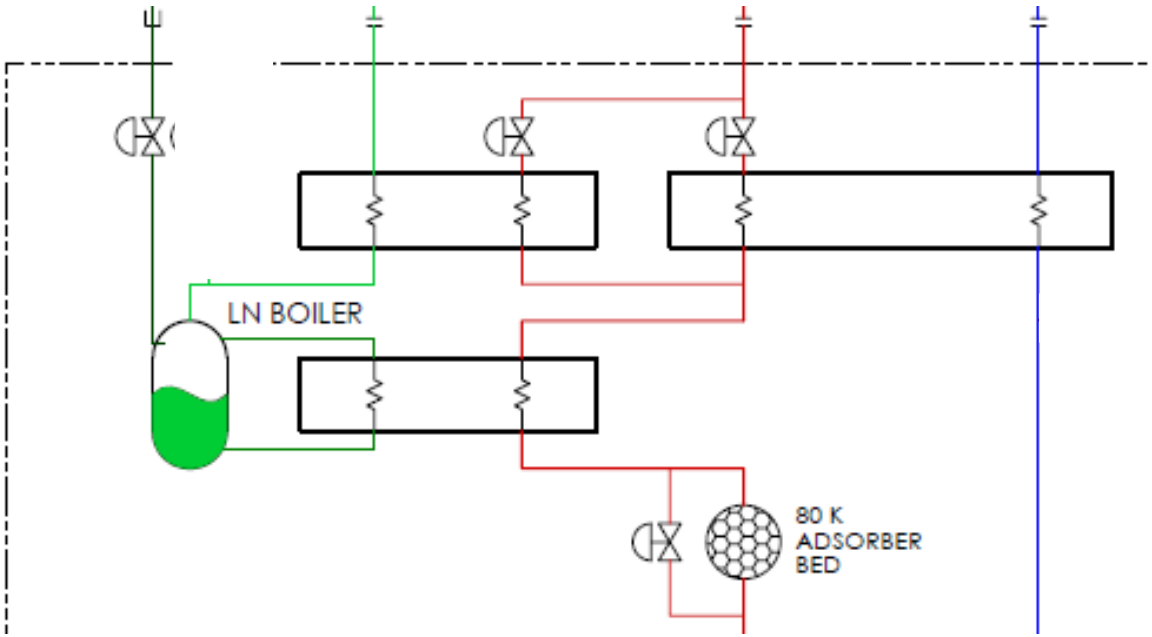

- Typical thermo-siphon configuration of LN pre-cooler segment of a 4.5K cryogenic helium refrigeration system

4.5 K Refrigeration System [5]

- Lower cold box (60 K to 4.5 K):
  - 7 centrifugal turbines arranged in *four expansion stages*
    - » i.e., 3 Brayton stages, each with 2 turbines in series, plus a “JT-expander” stage
    - » 22 to 45 mm (turbine) wheel dia., up to 3000 Hz
  - 12 aluminum-brazed plate-fin HX’s in 5 cores
  - Carbon adsorber at 20 K for neon and hydrogen
  - 2000 ℓ helium phase-separator and sub-cooler

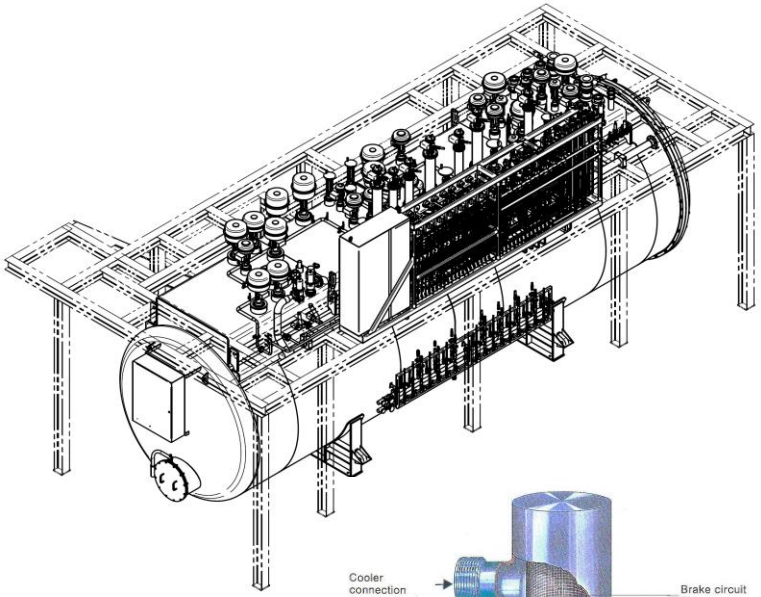

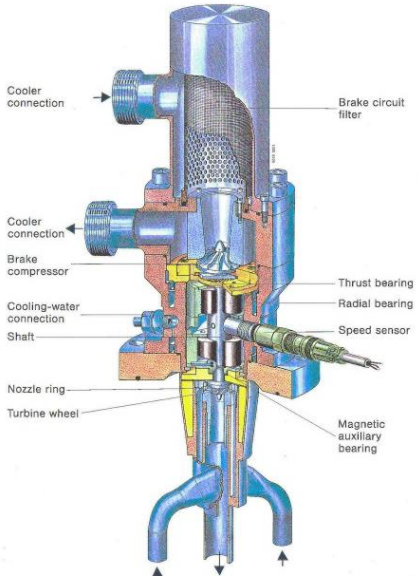

4.5 K Refrigeration System [6]

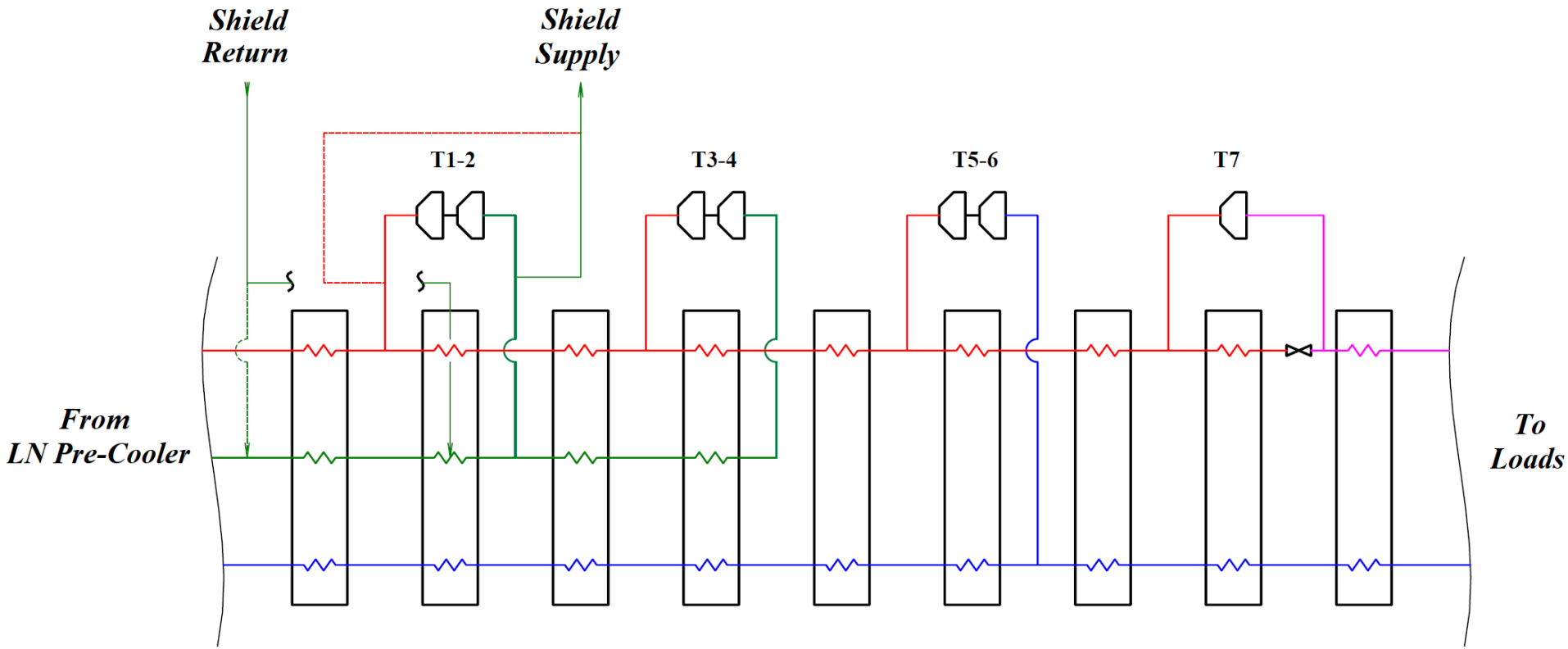

- Process configuration for FRIB 4.5 K refrigeration system (80 – 4.5 K) section

4.5 K Refrigeration System [7]

- Process configuration for FRIB SRF Test Facility 4.5 K refrigeration system
- Linde LR280 Helium Refrigeration Cold Box

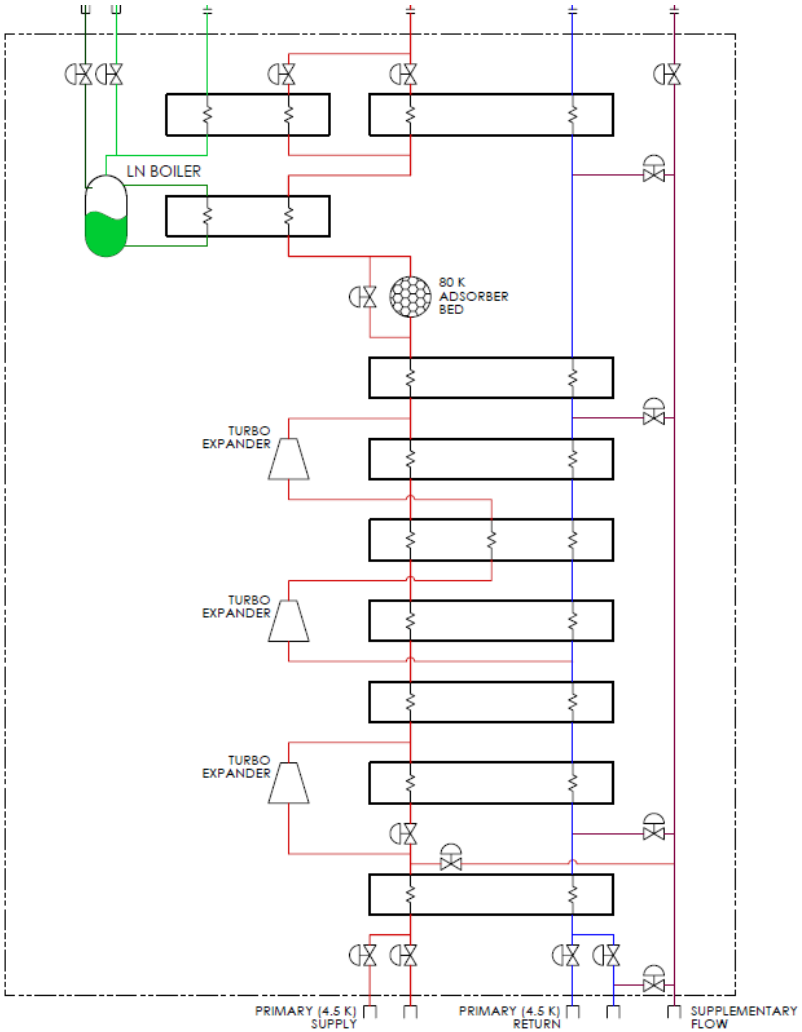

2.0 K Refrigeration System

2.0 K Refrigeration System [1]

- Heavy ions are accelerated in the linear segments of the beam line by employing superconducting radio-frequency (SRF) cavities
- SRF cavities operate at temperatures below the standard boiling point of helium (4.2 K @1 bar), at FRIB this temperature is ~ 2 K
- A reduction in pressure is required to reach saturation conditions which match the temperature requirements (FRIB ~ 30 mbar)

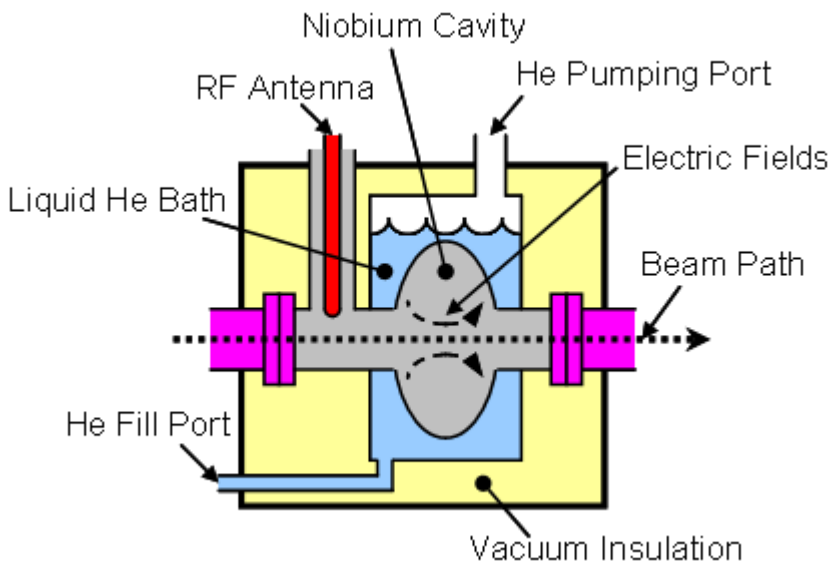

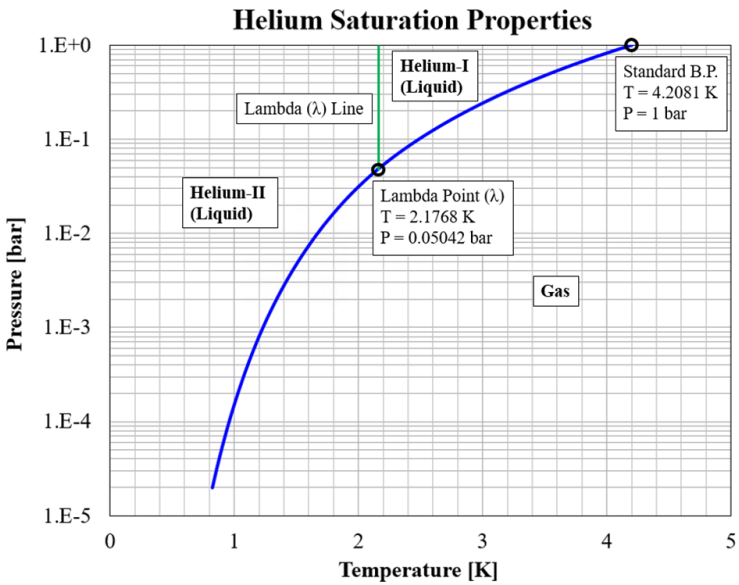

2.0 K Refrigeration System [2]

- There are several common methods that reduce the helium bath pressure; each having unique advantages and disadvantages

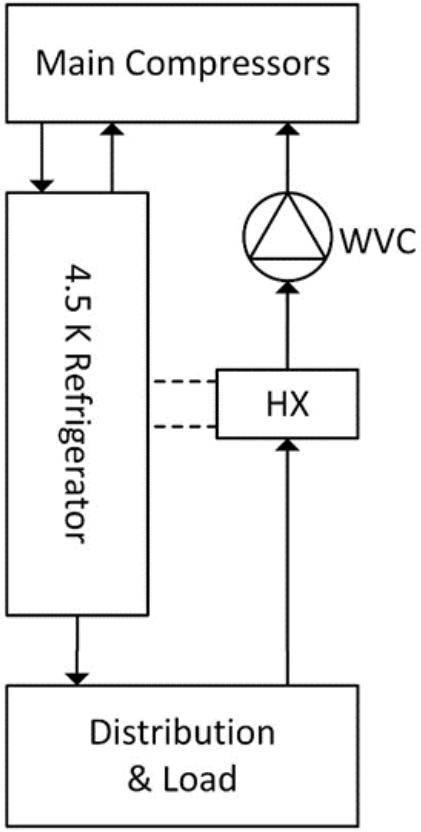

Warm-Compression

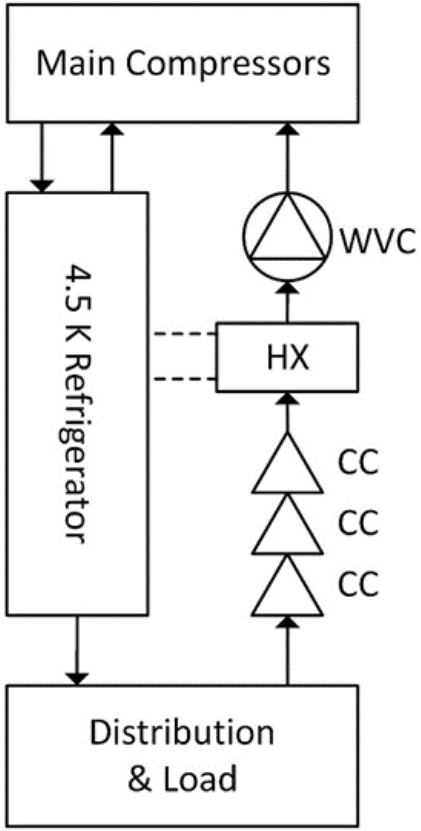

Mixed-Compression

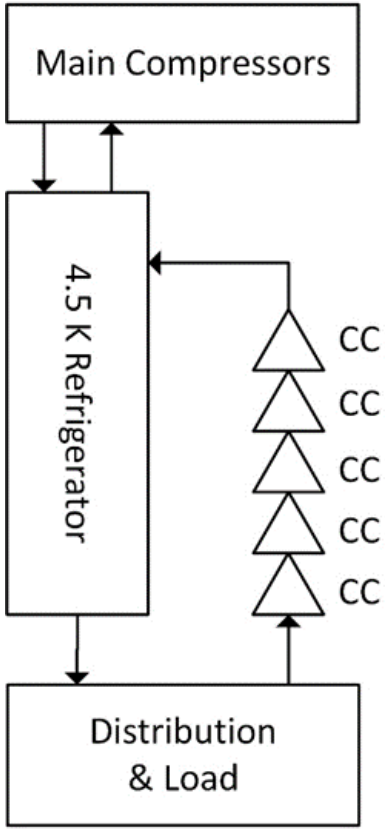

Cold-Compression

FRIB 2.0 Refrigeration System Sub-Atmospheric Cold Box (SCB) [1]

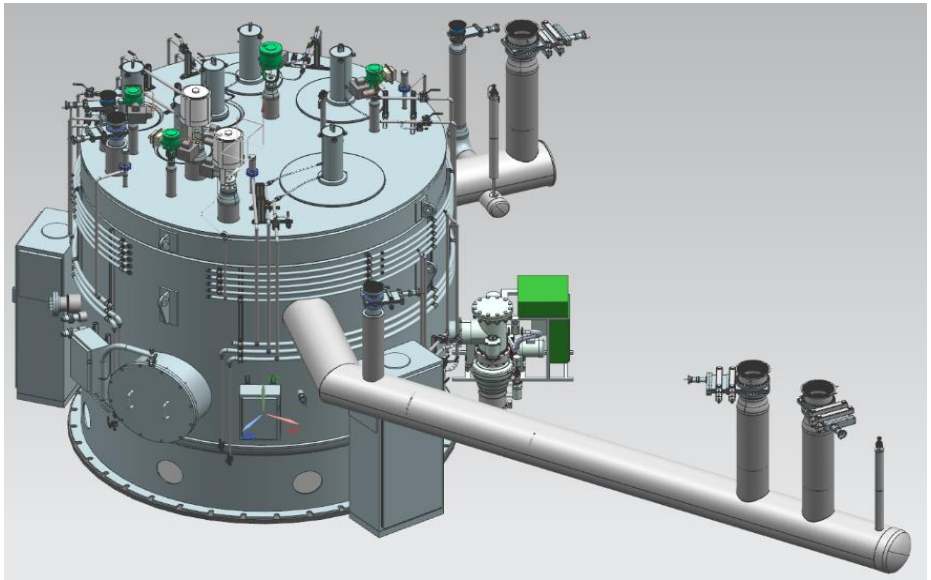

- Sub-atm cold box (SCB) allows FRIB Linac to operate at 2 Kelvin (30 mbar)
- FRIB utilizes a full cold-compression system
- Cold-compression typically involves multiple centrifugal-type compressors in series
  - Used to re-compress the sub-atmospheric 30 mbar 4.5 K helium returning from cryo-module Niobium cavities back up to ~1.2 bar
  - Vapor is 4 K since a 4.5 K to 2 K Collins heat exchanger is used within the cryo-module to cool the primary supply to the cavities

FRIB 2.0 Refrigeration System Sub-Atmospheric Cold Box (SCB) [2]

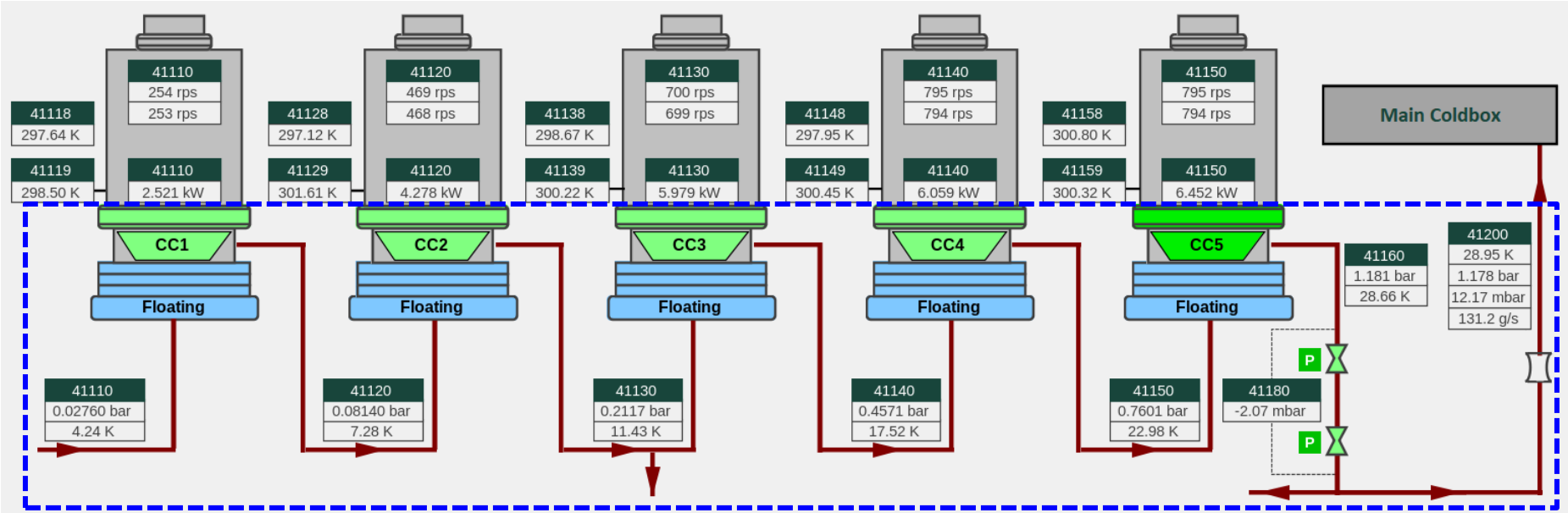

- Re-compression accomplished using 5 centrifugal cryogenic (cold) compressors in series
  - Compressors are directly coupled to an externally mounted (ambient temperature) permanent magnet synchronous motors and controlled using a variable frequency drive (VFD)
  - Impeller diameters range from around 7-5/8 to 3-3/8 inches, and operate at speeds up to around 300 to 800 Hz (depending on 'gear ratio' and impeller diameter)

FRIB 2.0 Refrigeration System Sub-Atmospheric Cold Box (SCB) [3]

- Top plate installation into vacuum shell (left) and typical cold compressor (right)

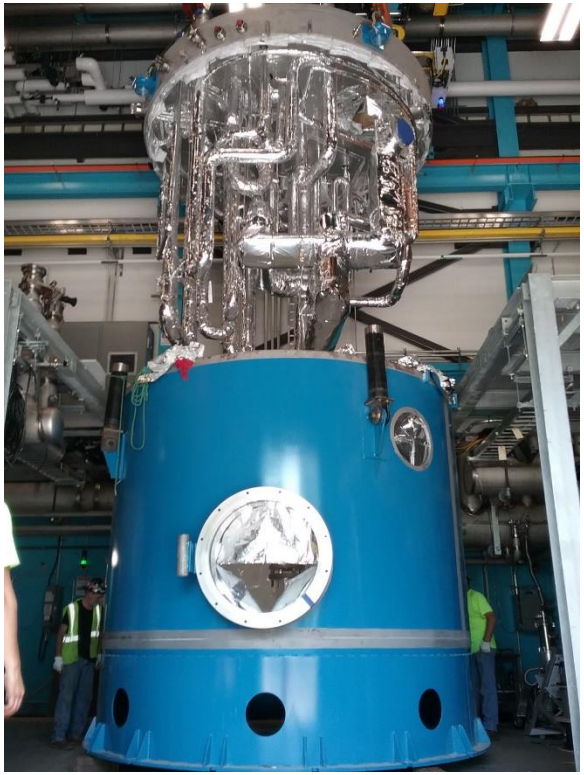

Helium Purification System

Helium Purification System [1]

- Contaminants can be introduced in several ways:
  - Gas Vendor (supply is ~30 ppm)
  - Residual left from commissioning
  - Sub-atmospheric refrigeration systems
- Main components of contamination in industrial grade helium:
  - Air (nitrogen, oxygen, etc.)
  - VOCs (oil mist, etc.)
  - Water vapor
- Purification to very low levels (< 1 ppm_v of contamination) is important for cryogenic applications
  - This can be done using adsorption, freeze-out, or membrane separation processes
  - Industrial purifiers commonly use adsorption and/or freeze-out processes

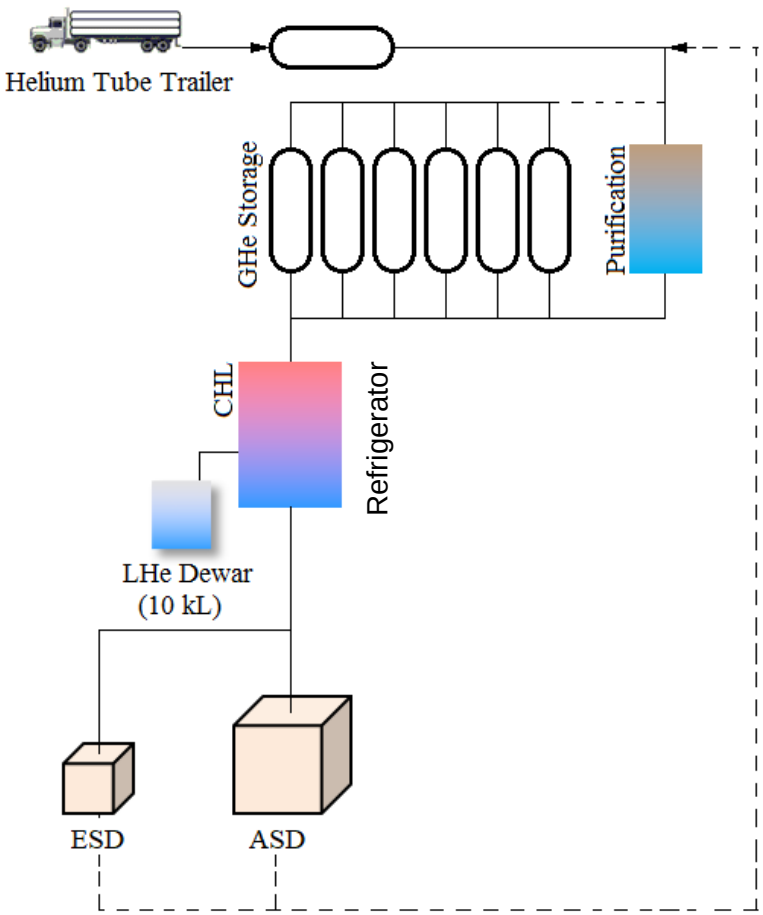

Helium Inventory and Purification System Management for an accelerator facility

Helium Purification System [2]

- Helium Purification Methods for Low Level Contamination Removal -
  - ***Adsorption Purification***
    - Moisture is removed using (typically) molecular sieves / silica gel
    - Air is removed using activated carbon
  - ***Freeze-out Purification***
    - Excellent control over removal of moisture (using S-V saturation temperature)
    - Efficient design is difficult (performance degradation with moisture collection)
  - ***Filtration***
    - Carried out using membranes (built using nano-manufacturing processes)
    - Still in development phase
    - Can be used for very specific use cases, but mostly limited to very low flow rates (very slow process)

Helium Purification System [3]

- At present, several designs of helium purifiers for low level contamination removal in industrial applications are available
- The purifier shown was developed by Wright et al. for Jefferson Lab
- It uses a molecular sieve bed for moisture removal and an activated carbon bed for removal of other gaseous constituents (nitrogen, oxygen, argon, etc.)
- However, it was developed for internal use at the facility and not available commercially

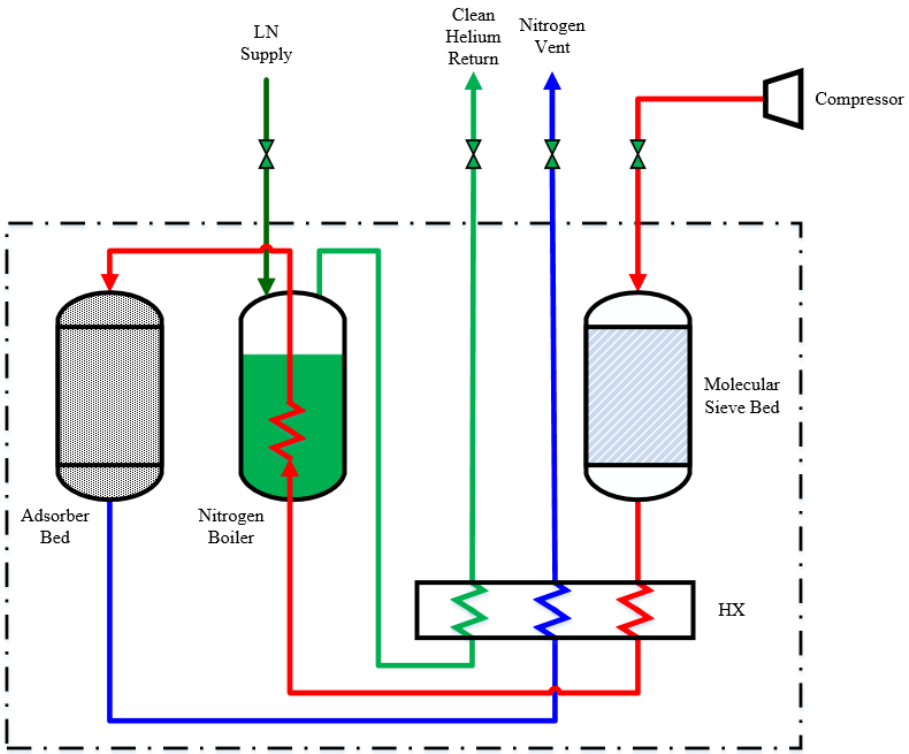

Simplified schematic of an industrial helium purification system for low level contamination removal (designed by Wright et al. [2009])

Helium Purification System [4]

Helium purifiers (left) and compressor (right)
(Located in FRIB compressor room)

- Used for low level impurity removal (~100 ppm to below 1 ppm)
- Purifier cold box
  - Freeze-out HX for moisture
  - Carbon bed for air
  - Uses liquid nitrogen
- Purifier compressor
  - ~112 kW, 480 V, 3-ph
  - 109 ℓ/s swept volume
  - Hermetic housing
  - Oil used for lubrication of bearings and rotors

Helium Purification System [5]

- Low level moisture contamination (<100 ppm_v) is difficult to remove with adsorption (e.g., dryer bed)
- Purification by moisture freeze-out provides excellent performance and reliability over a long time period
  - Freeze-out occurs in helium-helium-nitrogen heat exchanger (HX) and its design is critical
- Purifier design uses liquid nitrogen (LN) cooled adsorption for air contaminate removal
  - Sensible heat of nitrogen used to pre-cool helium in coiled finned-tube HX and freeze-out moisture contaminate
  - HX provides relatively large surface area while maintaining geometrical compactness
- FRIB design allows the purifier system to be operated over a wide range of process conditions (6 – 18 bar, and 4 – 60 g/s)
- Preliminary study shows the system has the potential to be scalable, and modifiable for hydrogen purification

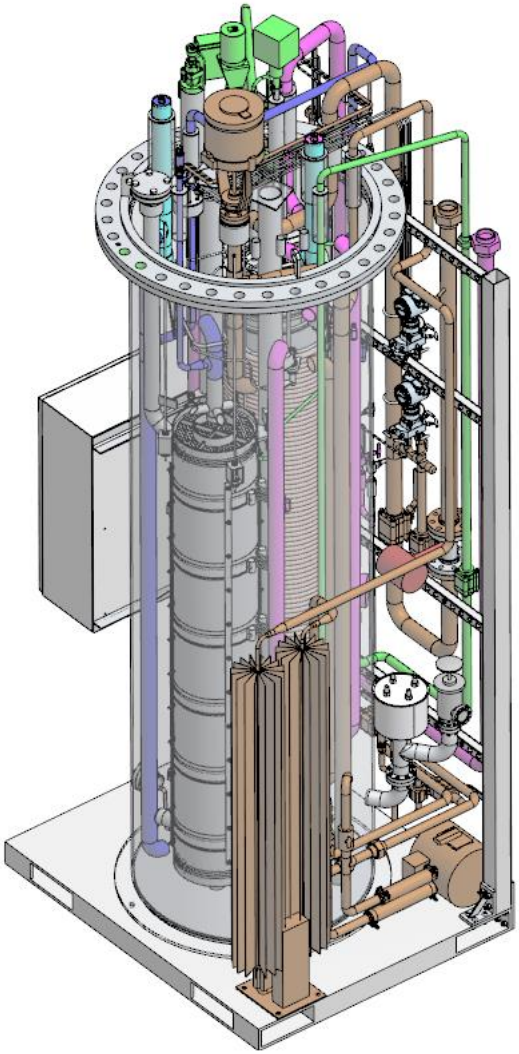

Helium Purification System [6]

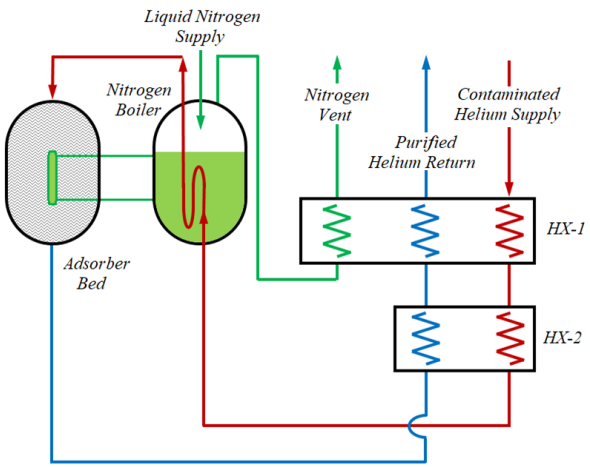

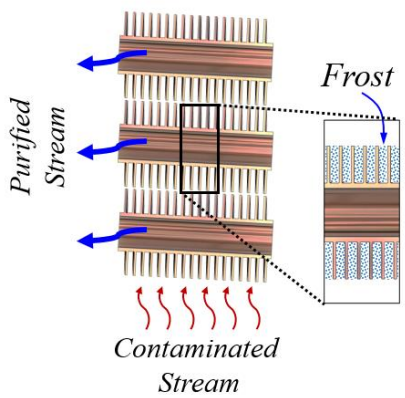

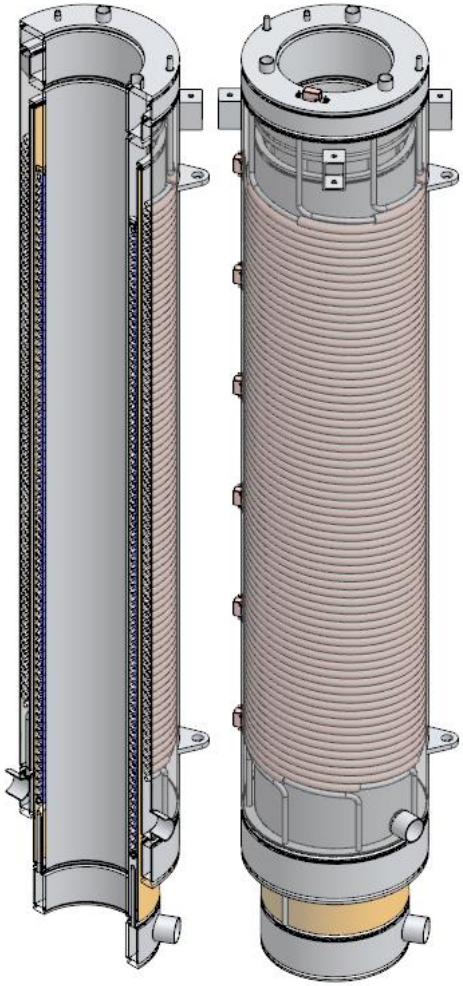

- Major components of helium purifier cold box:
  - Coiled finned-tube HX
  - Activated carbon adsorber bed
    - » Removes air contaminants
    - » LN Cooled
  - Liquid nitrogen boiler (~80 K)
    - » Provides stable cooling
  - Associated interconnecting piping and sub-systems for operation and regeneration
- HX is geometrically divided into two sections and has a folded construction
  - Contaminated stream flows over the finned-tubes (shell-side, from bottom), and is cooled by the purified helium stream
  - Frost is thawed during regeneration and is collected at the bottom by gravity

Cryogenic Distribution

Cryogenic Distribution [1]

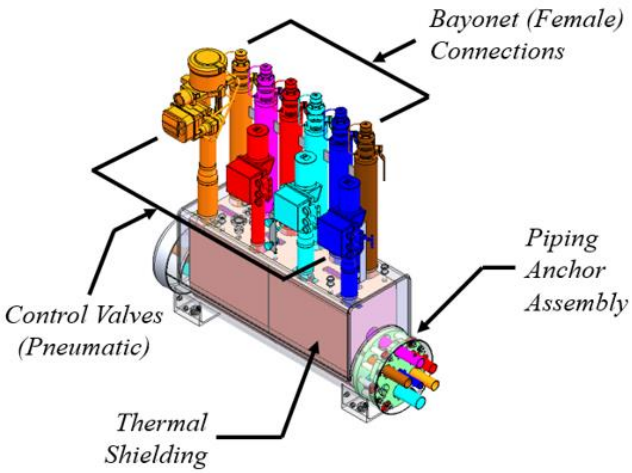

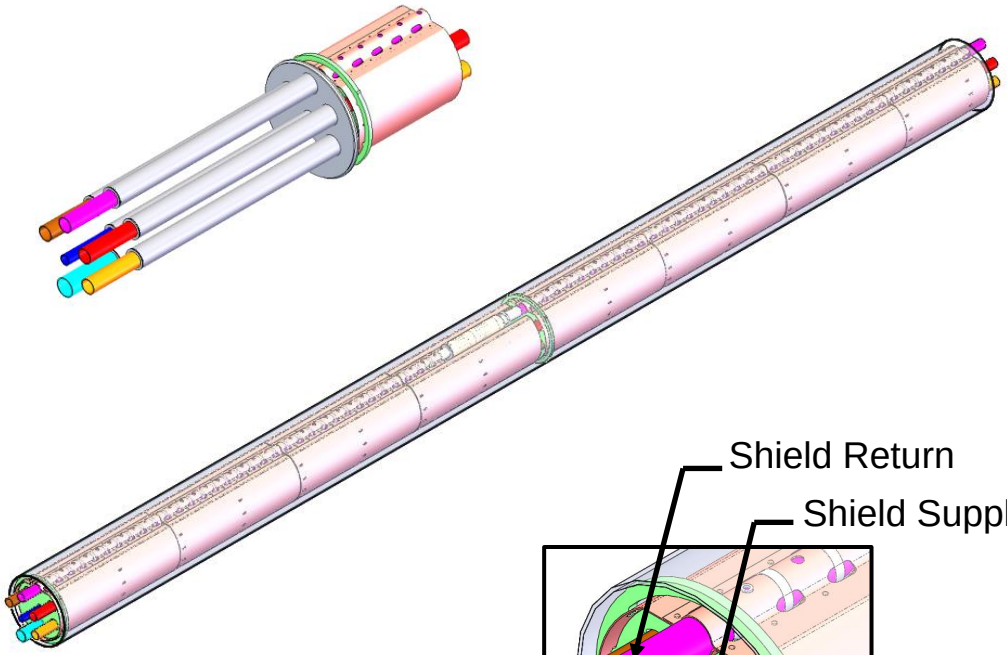

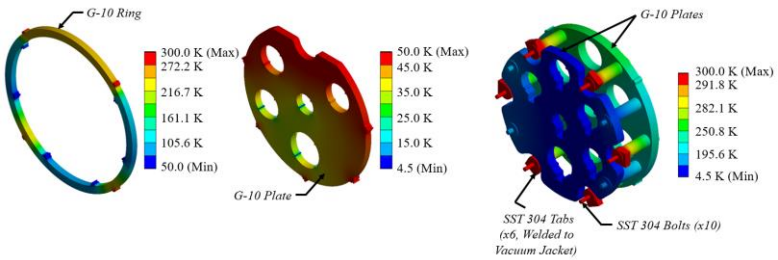

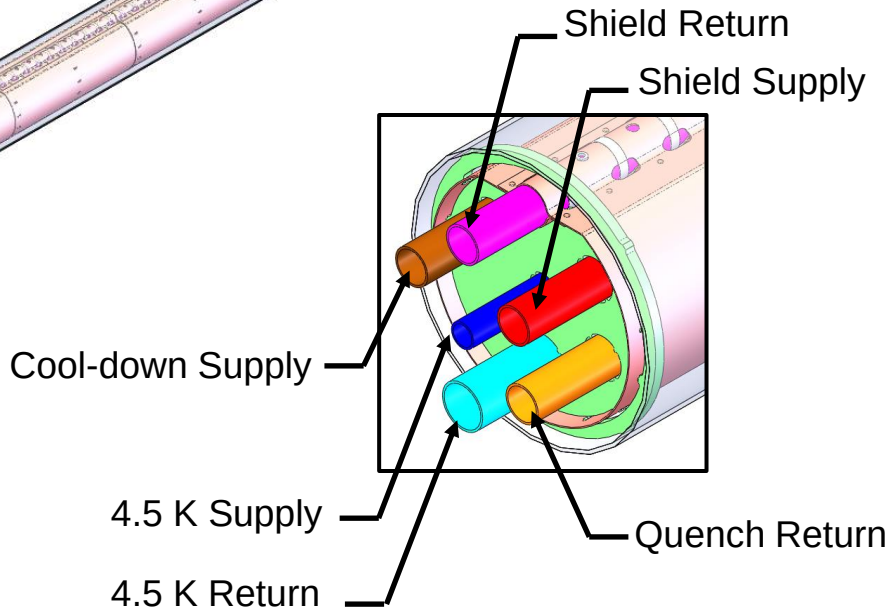

Cryogenic Distribution [2]

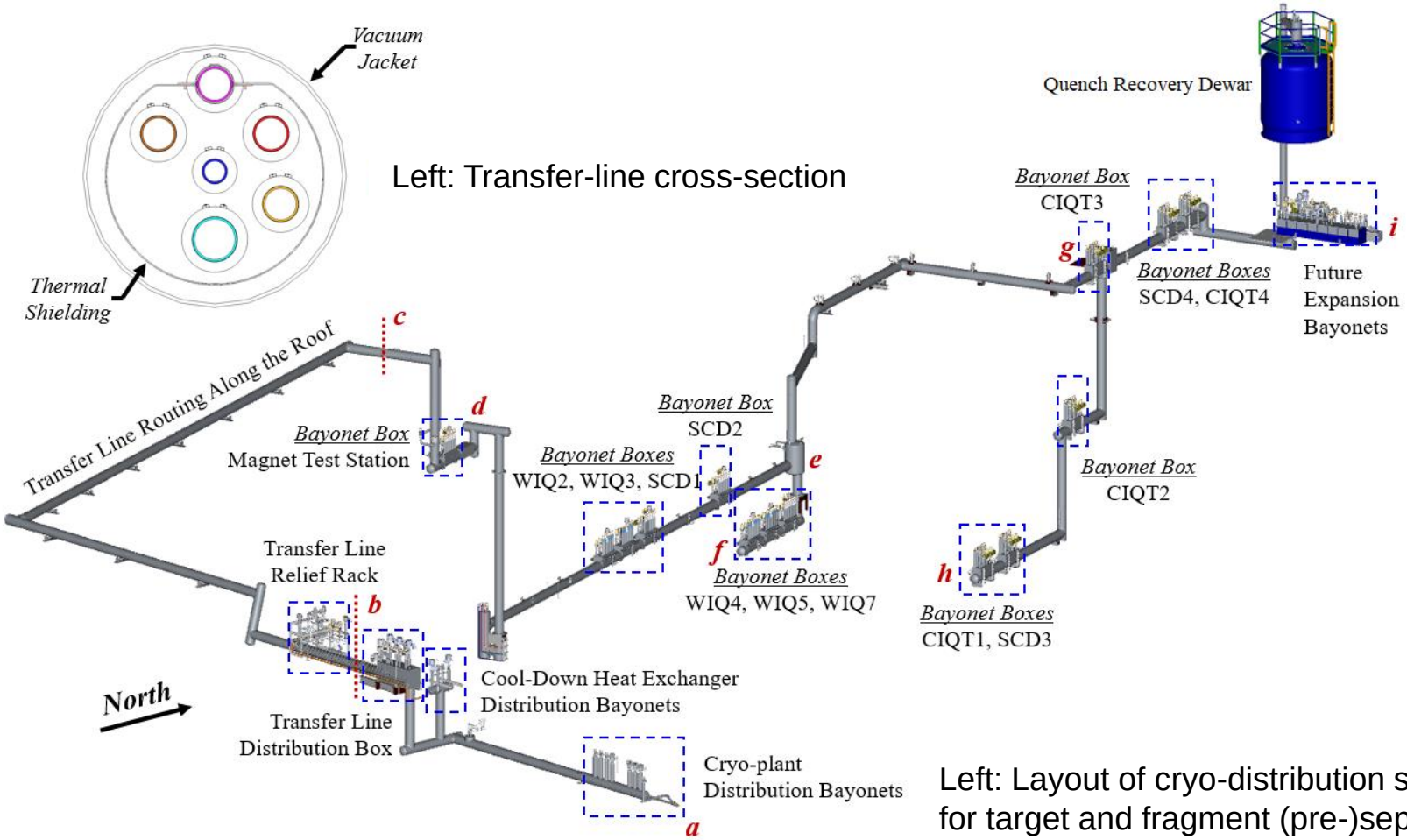

Left: Layout of cryo-distribution system for target and fragment (pre-)separator segment

Miscellaneous Sub-Systems

Superconducting Magnet Quench [1]

Magnet Quench Recovery Dewar:

- It is a 10,000-liter (nominal) vessel designed to –
  - *Absorb the pressure pulse and energy from the quench in a magnet and contain the helium with out venting*
  - *Aid in helium inventory management during maintenance*

- This design concept is based on the successful quench testing of magnet strings (ASST-A) at Super Conducting Super Collider without venting helium (Ganni, V., SSCL 5, 1993)

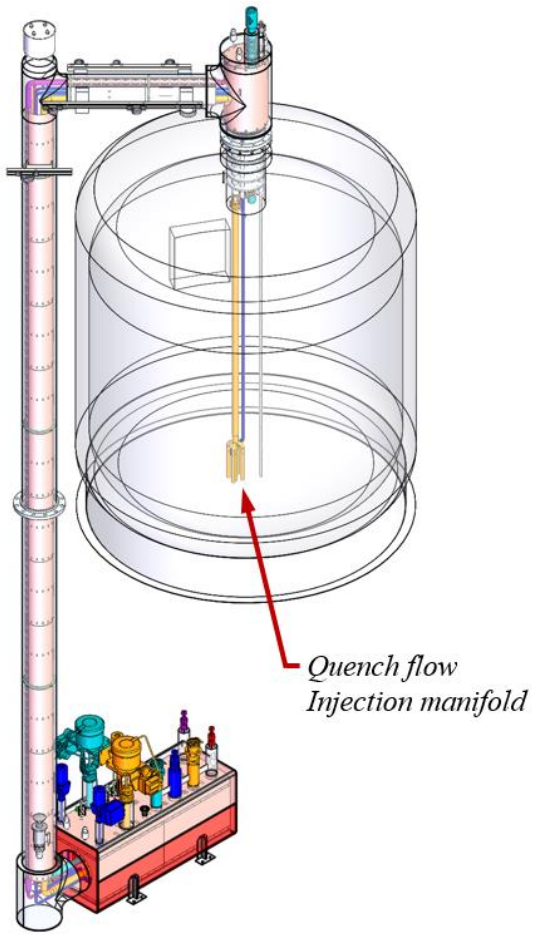

Figure: 3D Model of quench management dewar and associated distribution box.

Superconducting Magnet Quench [2]

- Consider a cryogenic buffer volume to absorb both the mass and energy released during the quench of a superconducting magnet
- This buffer volume is referred to as the Quench Inventory Management / Recovery Dewar (or QRD)
- Typically, the boil-off helium expelled from the superconducting magnet cryostat has a temperature in range of 4.5 – 15 K and has significant amount of cryogenic refrigeration stored in it
- This boil-off flow (due to quench) from the magnet can be directly injected into a pool of saturated liquid helium stored in a cryogenic buffer volume

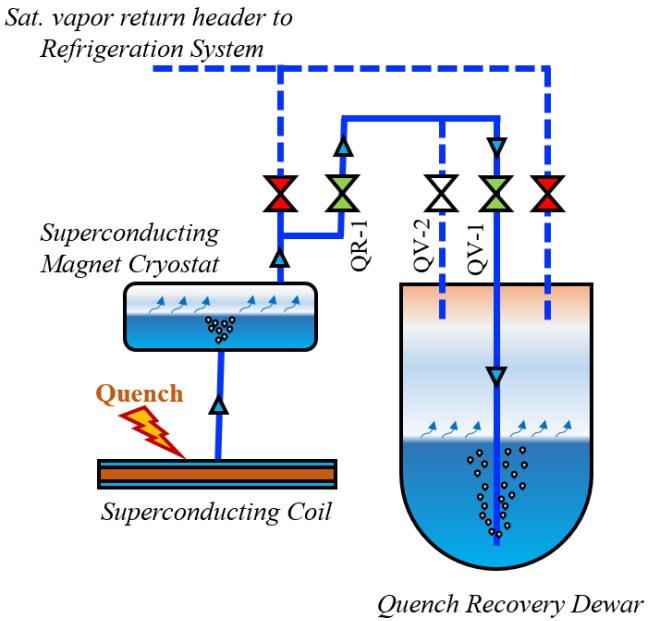

  - The resulting direct contact heat exchange between the liquid helium and the quench release flow cools the latter at the expense of generating more boil-off helium and hence pressurizes the buffer vessel
  - This process takes advantage of the increased compressibility of the near-critical helium to keep the pressurization of the buffer vessel at manageable levels (below 2.0 bar)
- The buffer vessel (and cryostat) can be depressurized later during the recovery period

Superconducting Magnet Quench [3]

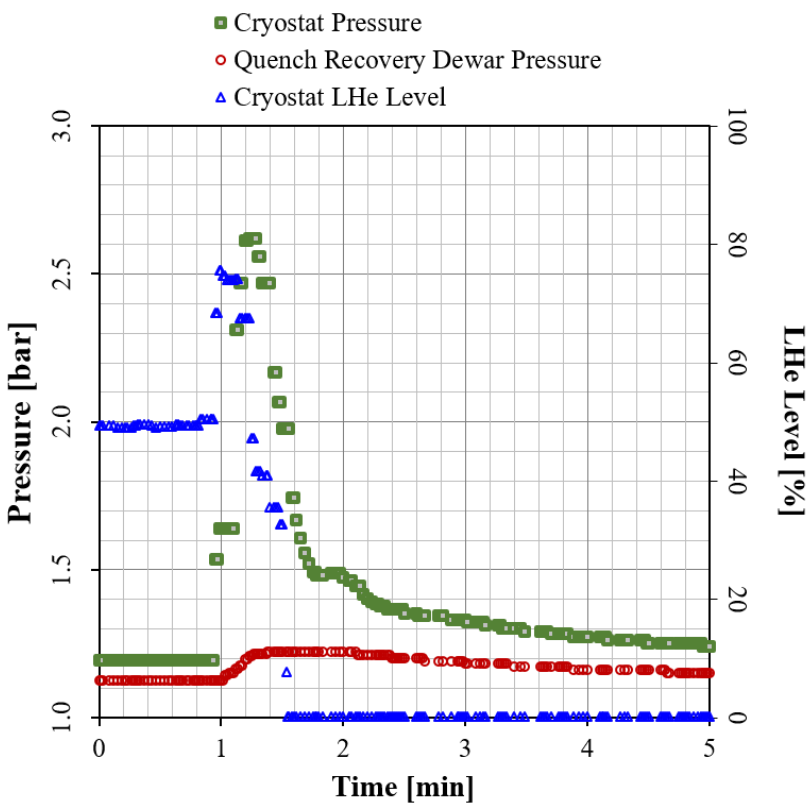

Fig.: Transient response of the FRIB Experimental System LTS Di-pole magnet (SCD3), and the quench recovery dewar following a quench

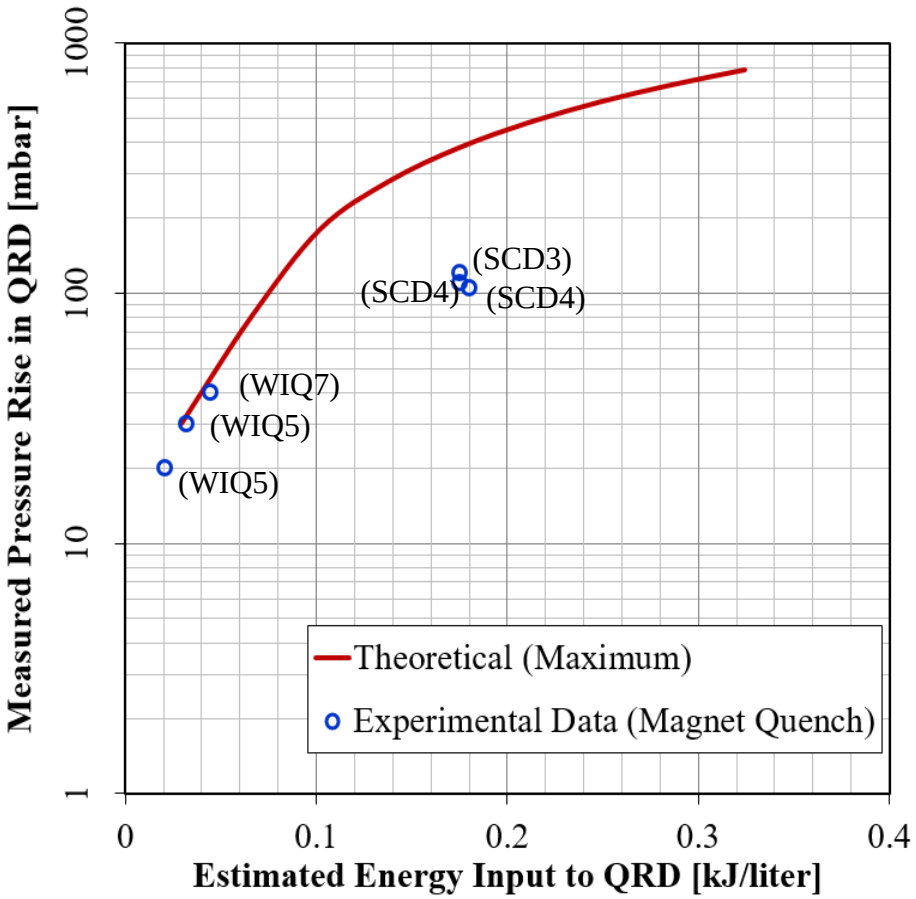

Fig.: Calculated and measured pressure rise in QRD due to (quench) energy addition

THANK YOU

Further Inquiries: hasann@frib.msu.edu